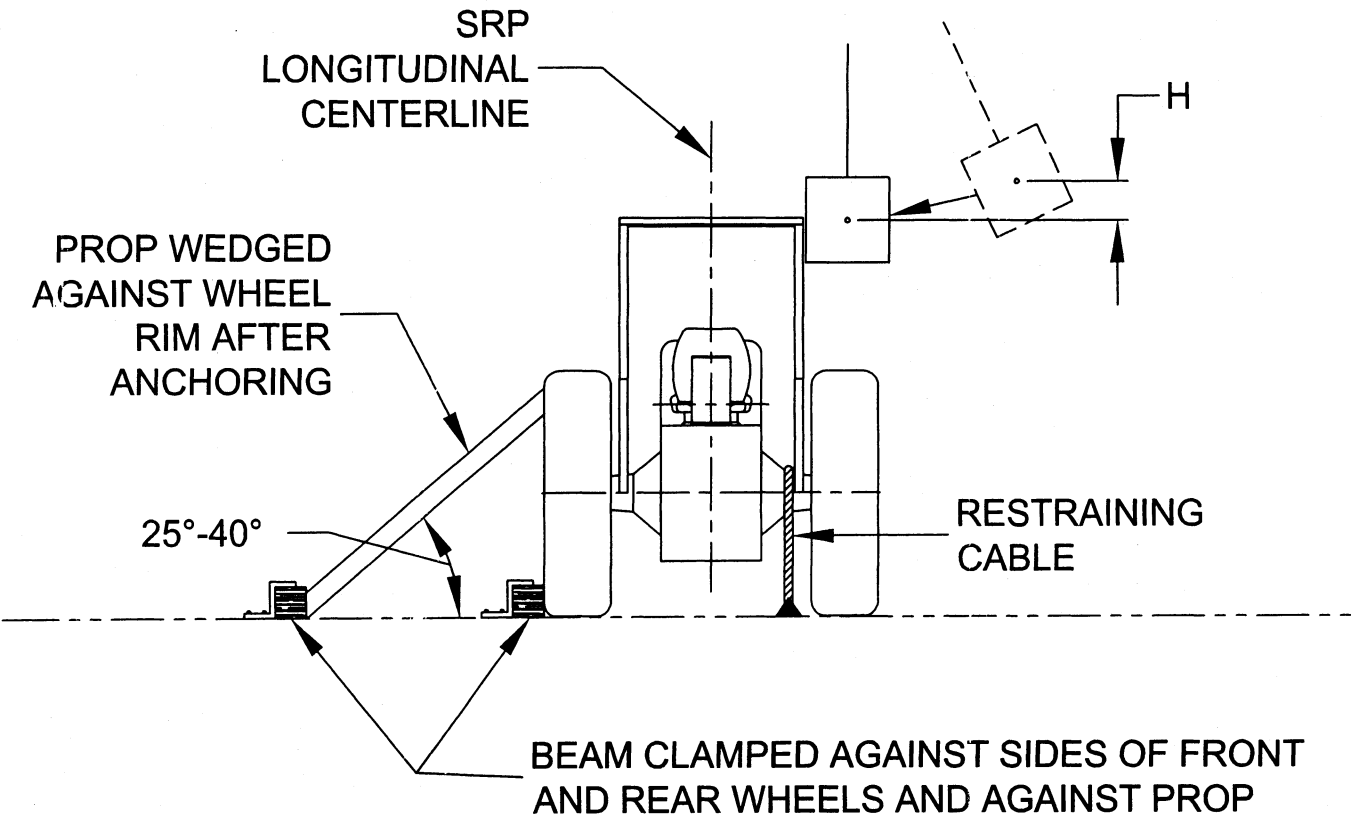

FIGURE C-9 - SIDE IMPACT APPLICATION.