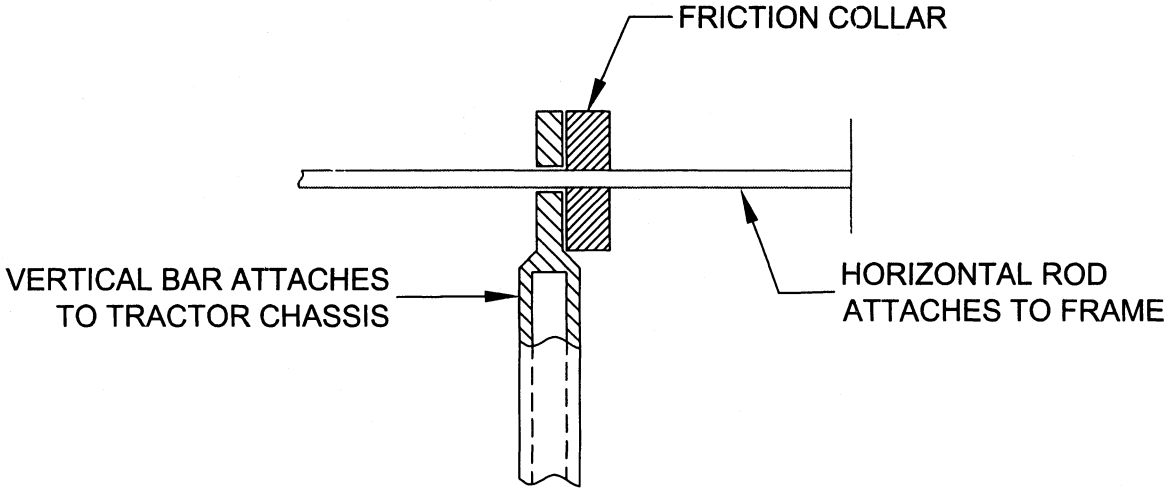

FIGURE C-4 - METHOD OF MEASURING INSTANTANEOUS DEFLECTION.