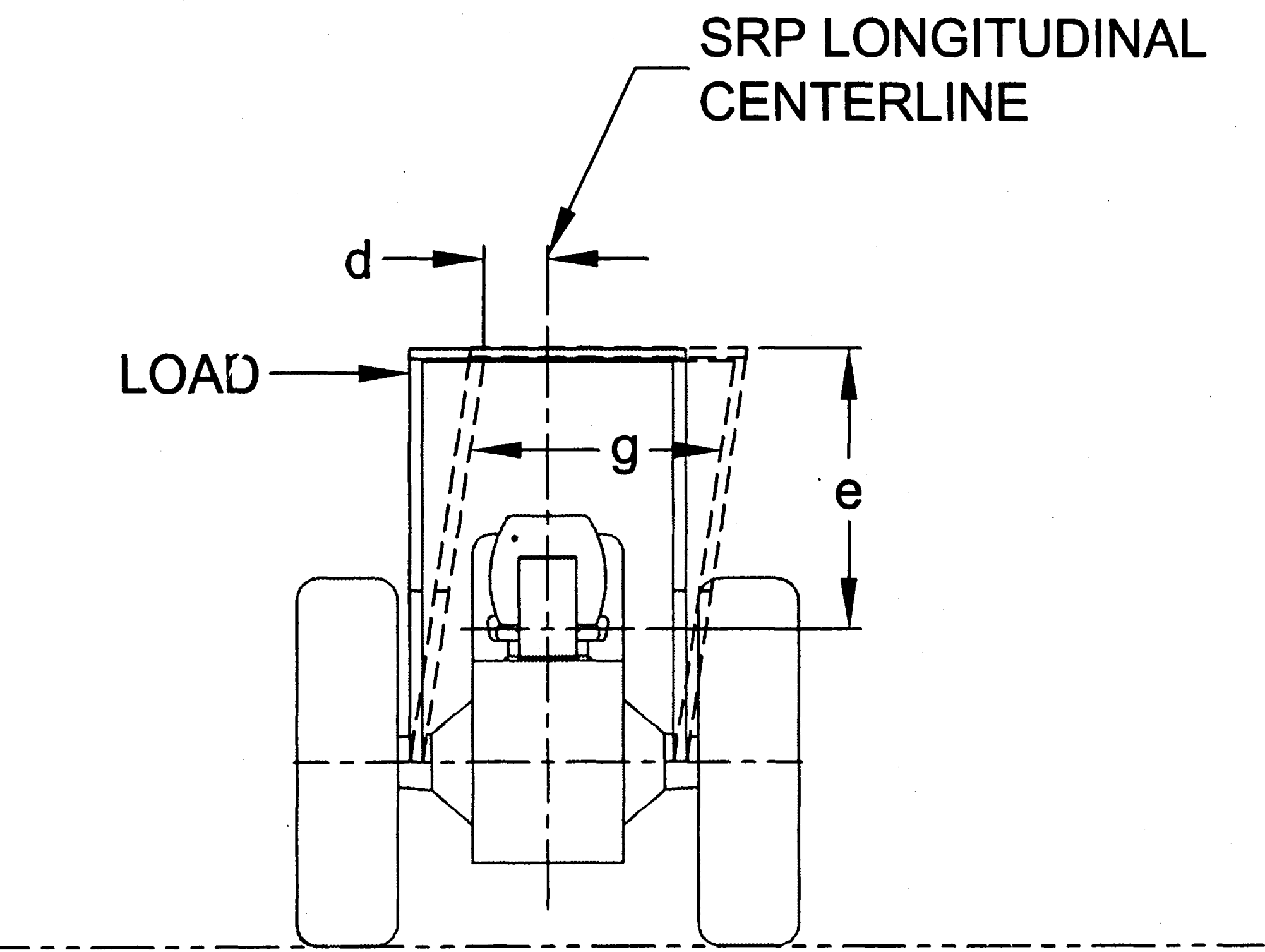

FIGURE C-2 - SIDE LOAD APPLICATION.