Figure C to § 3285.402 Longitudinal Anchoring

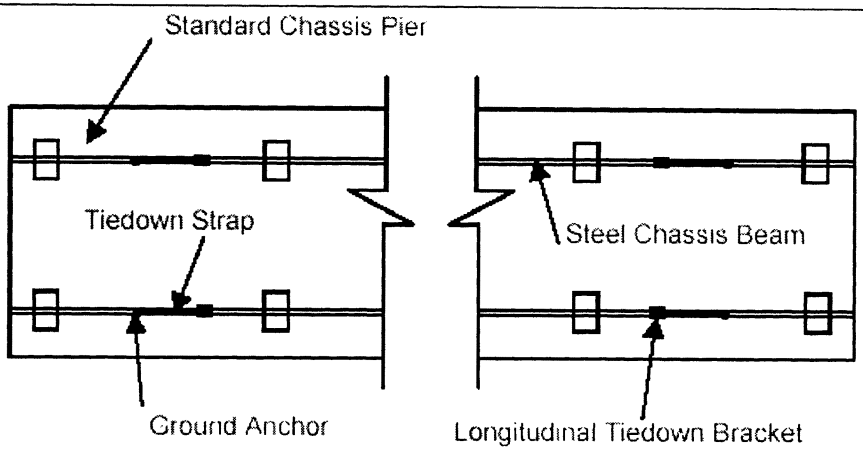

Longitudinal Anchorage – Plan View

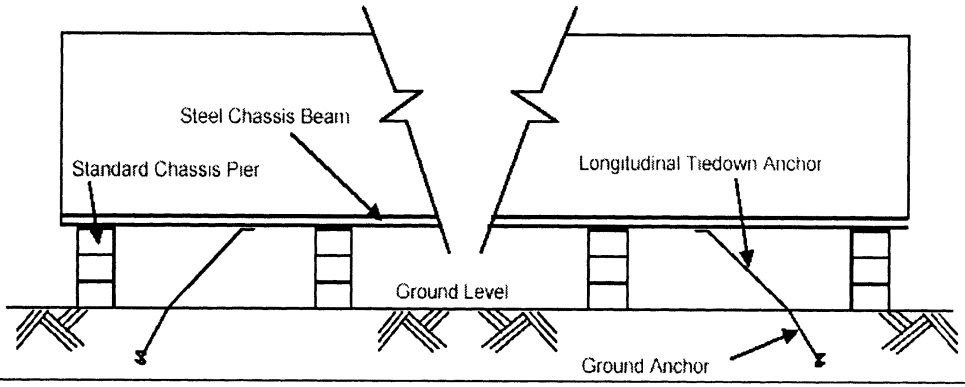

Longitudinal Anchorage – Side View

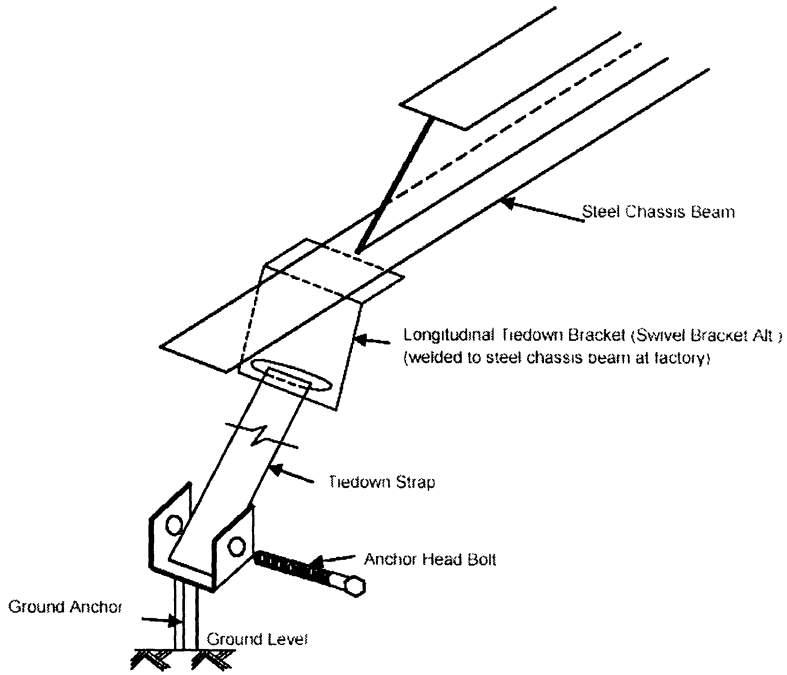

Typical Longitudinal Anchorage Bracket and Ground Anchor Attachment