**METRIC**
mm

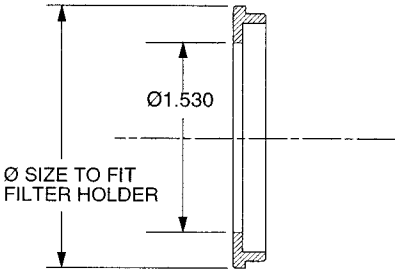


FILTER CASSETTE UPPER
SECTION D-D

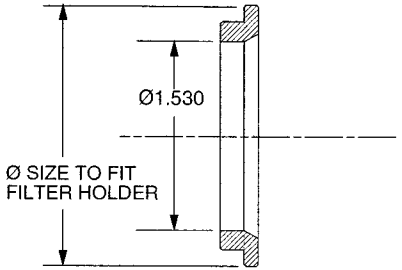


FILTER CASSETTE UPPER
SECTION E-E

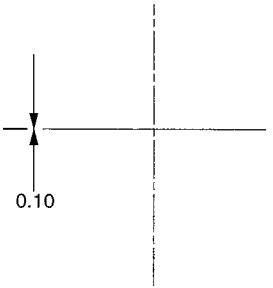


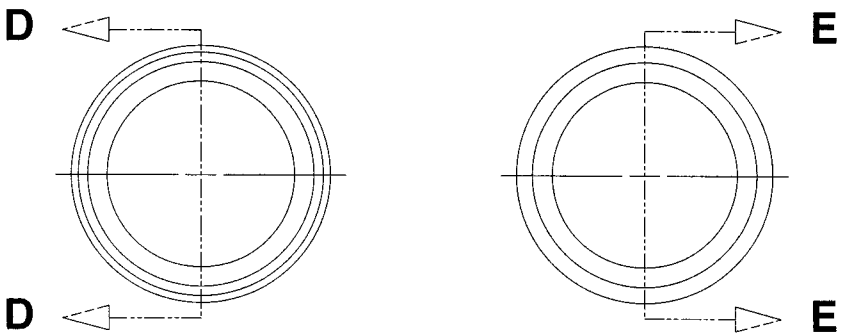


CASSETTE MATERIAL:
300 SERIES STAINLESS STEEL OR
POLYCARBONATE OR
ABS

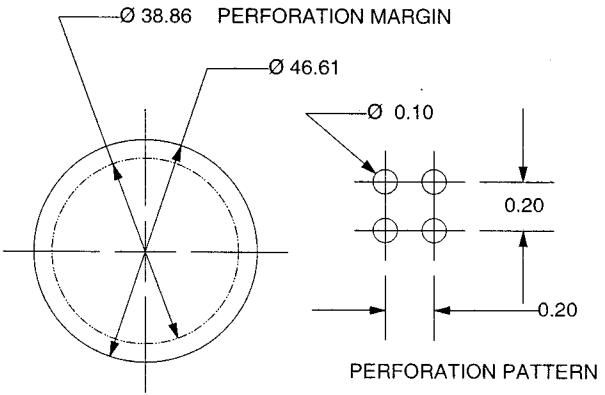


SCREEN MATERIAL:
300 SERIES STAINLESS STEEL
FULL OR HALF HARD

## N07-3 FILTER CASSETTE AND SCREEN