METRIC
mm

CONE CONVERGENCE ILLUSTRATED AT THE DOWNSTREAM END OF A FITTING WITH A MIN. I.D. 8.5 mm
NOTE: THE FITTING IS MODIFIED TO MAINTAIN 12.5° TO THE CONVERGENCE .

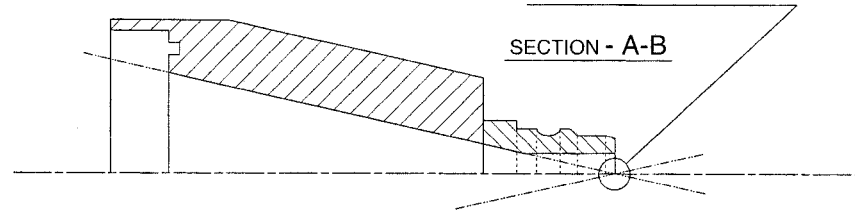

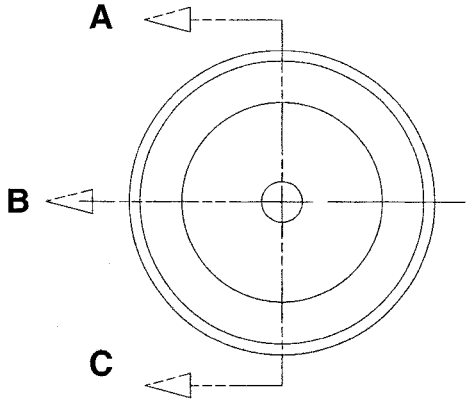

TYPICAL END VIEW

CONE CONVERGENCE ILLUSTRATED INSIDE A FITTING WITH A MIN. I.D. 8.5 mm

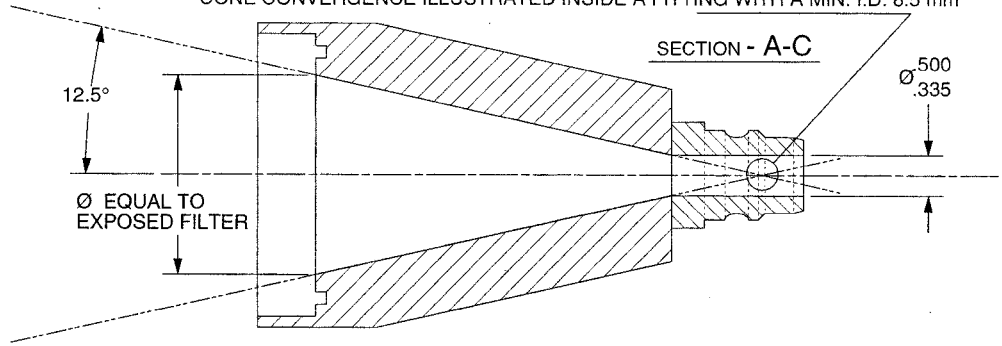

CONE CONVERGENCE ILLUSTRATED AT THE UPSTREAM END OF A FITTING WITH A MIN. I.D. 8.5 mm
NOTE: THE FILTER HOLDER IS MODIFIED TO MAINTAIN 12.5° TO THE CONVERGENCE .

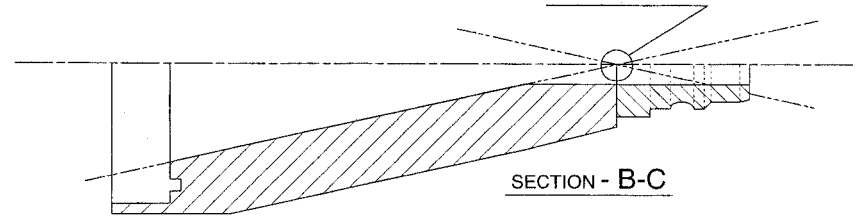

NOTES:
1) MATERIAL, TYPE 300 STAINLESS STEEL
2) ROUGHNESS, ALL WETTED SURFACES, 32 RMS
3) BREAK ALL SHARP EDGES

N07-2 FILTER HOLDER GEOMETRY