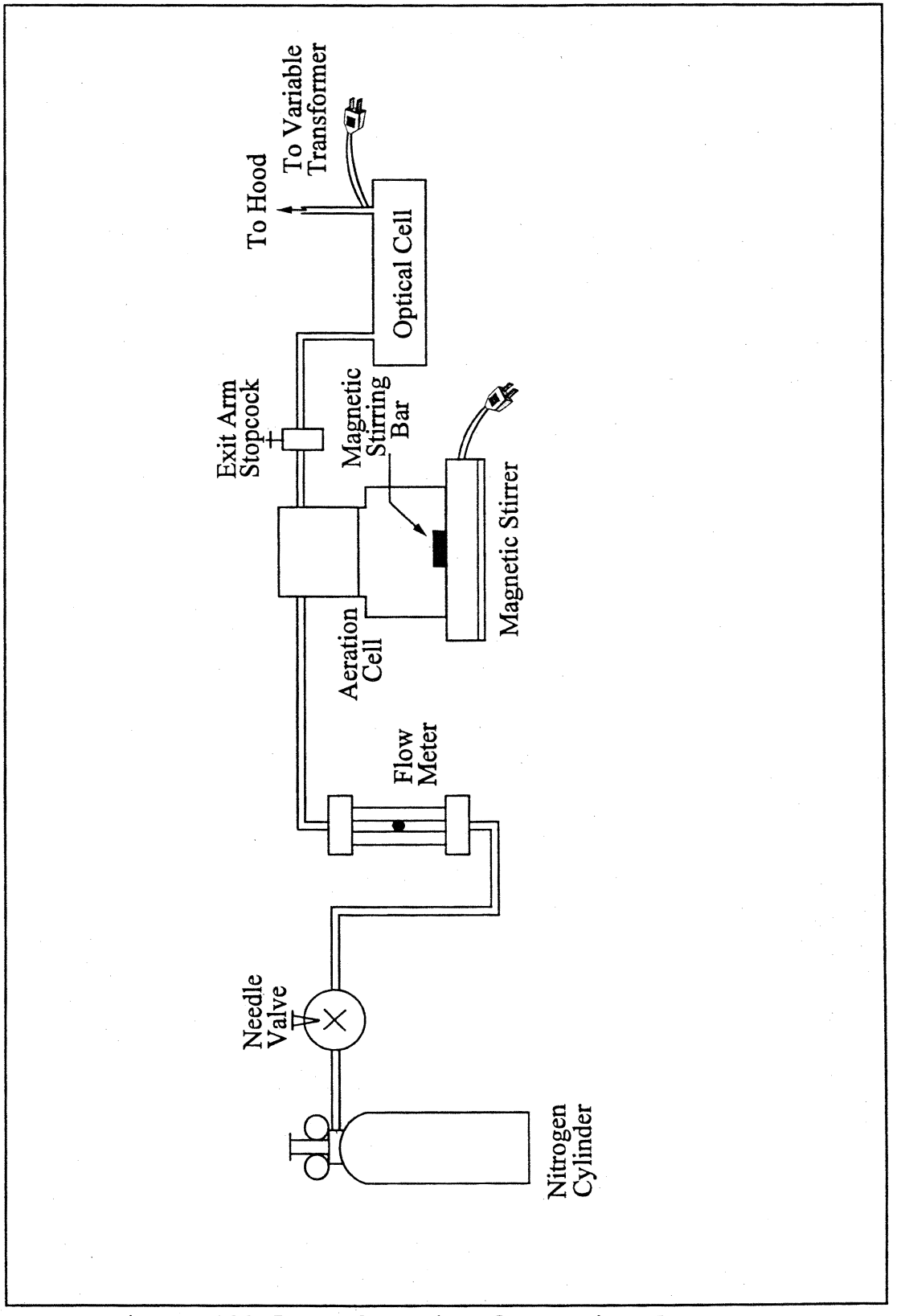

Figure 101-5. Schematic of Aeration System.