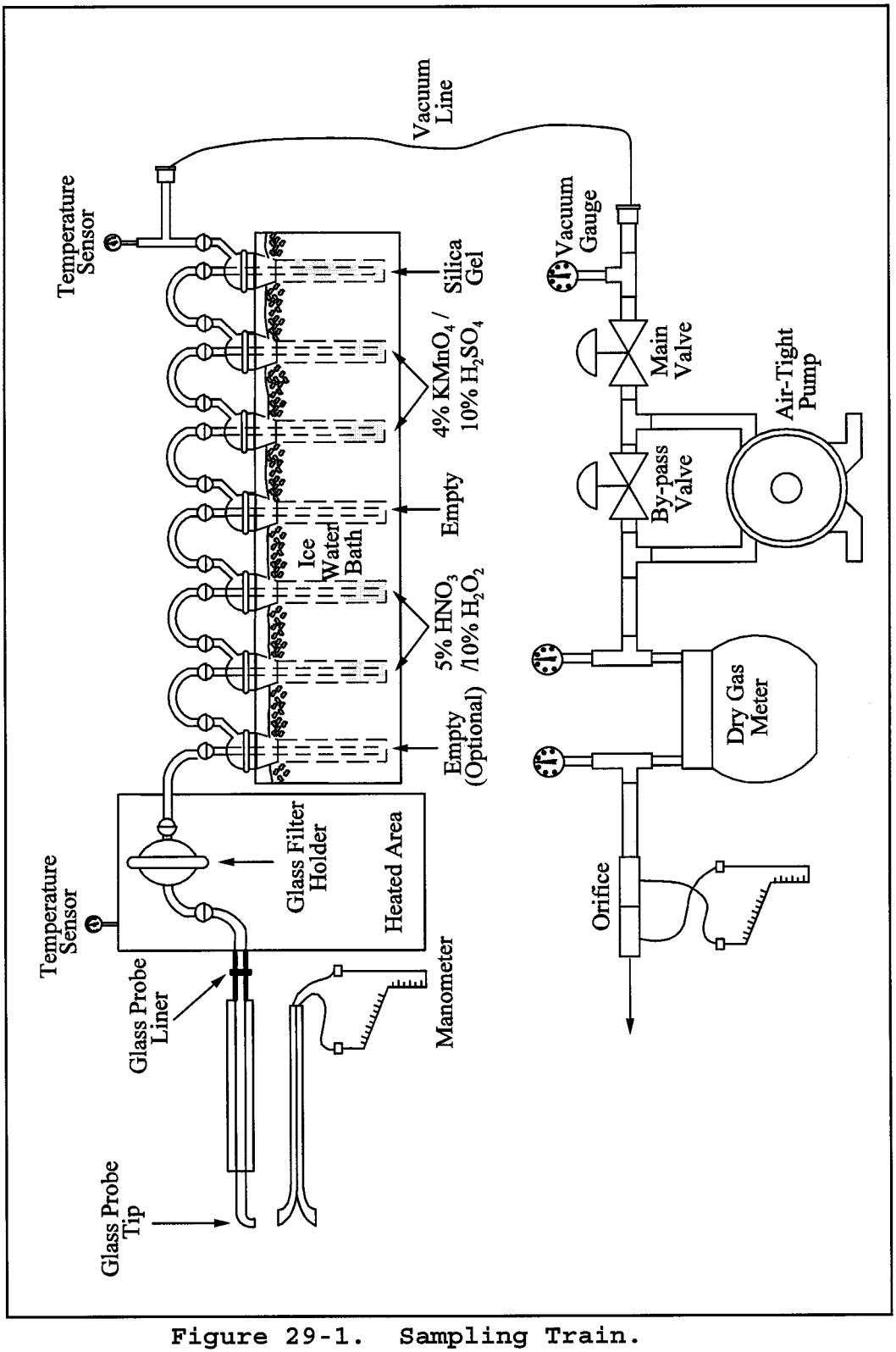

Figure 29-1. Sampling Train.