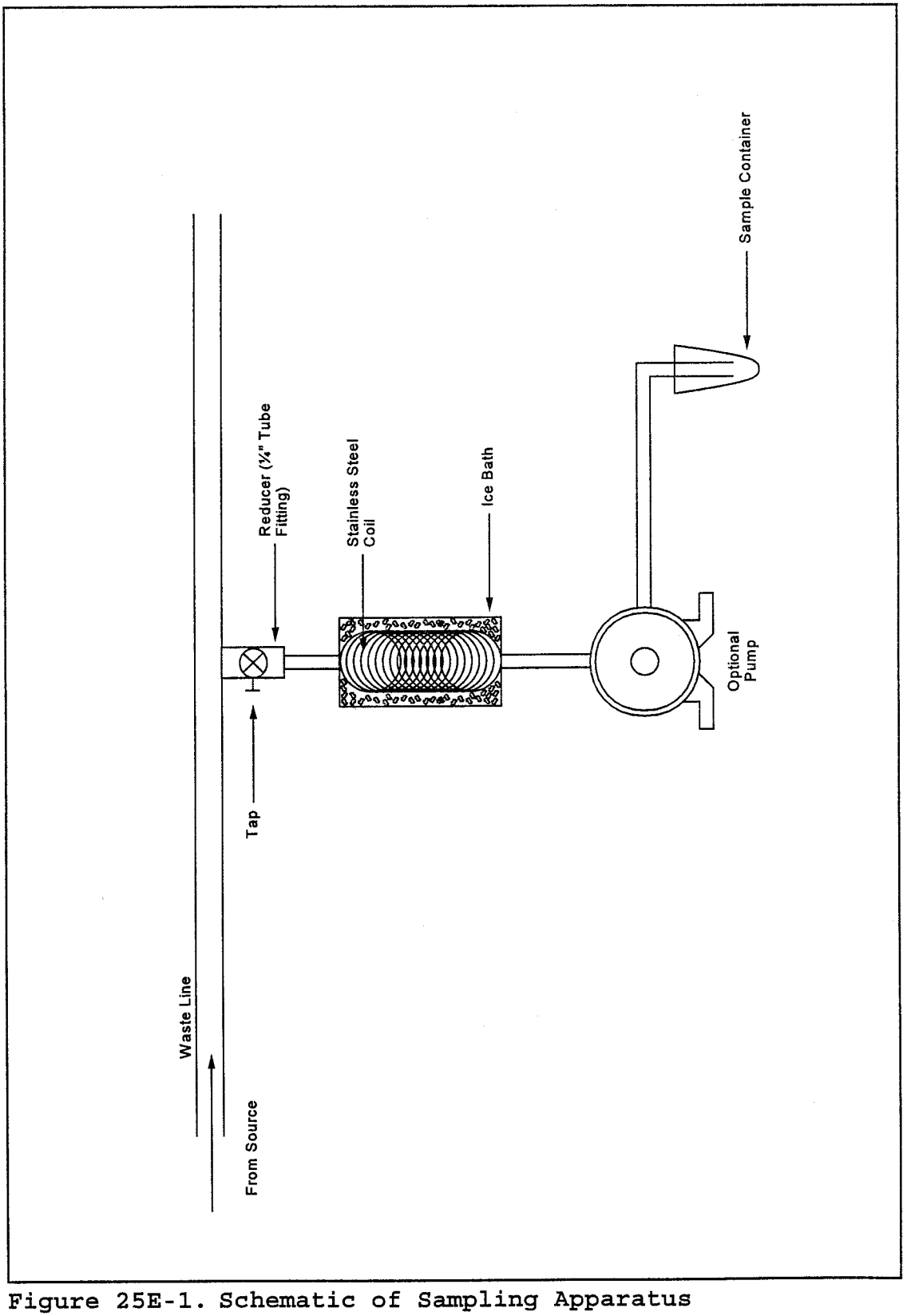

Figure 25E-1. Schematic of Sampling Apparatus