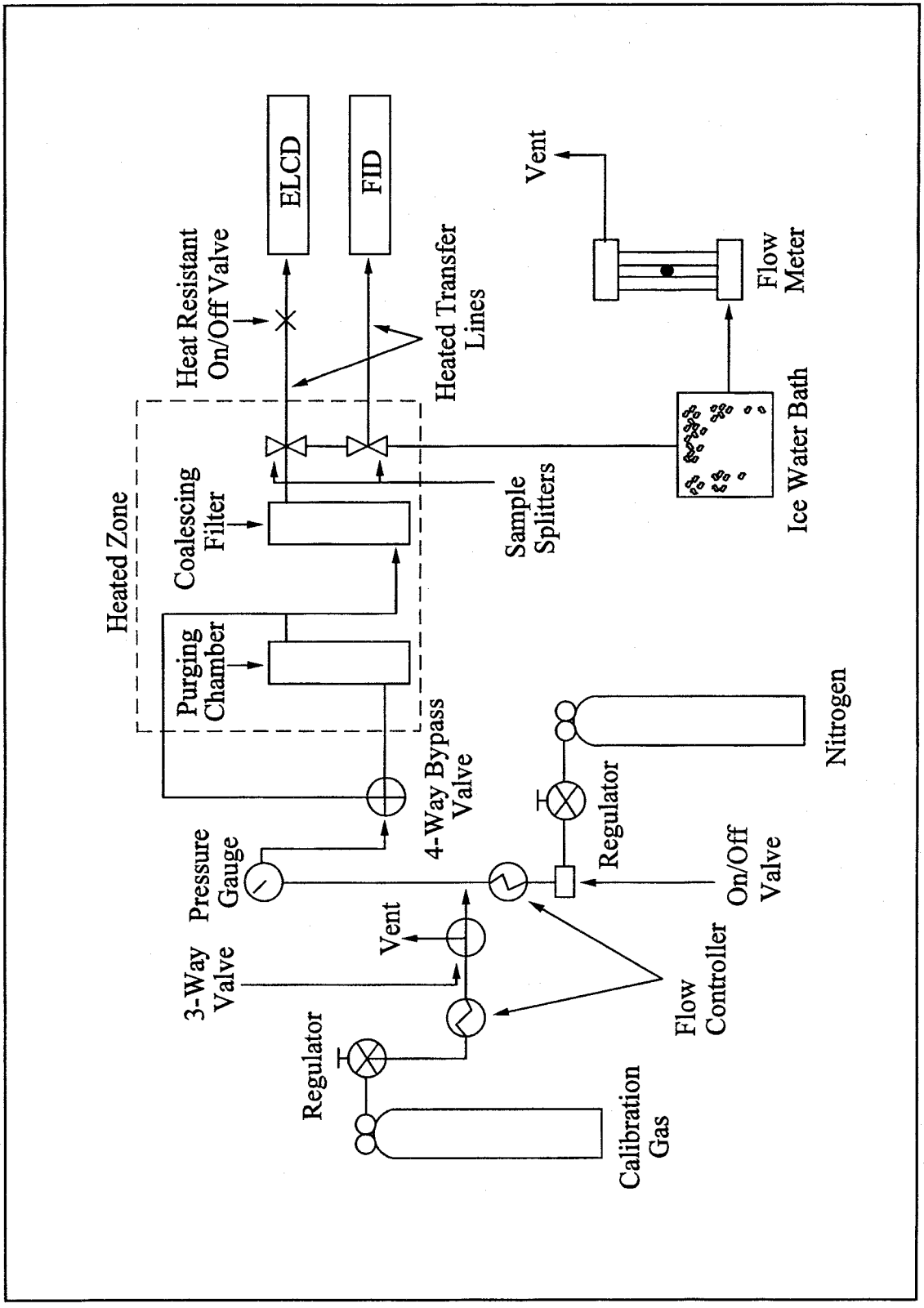

Figure 25D-1. Schematic of Purging Apparatus.