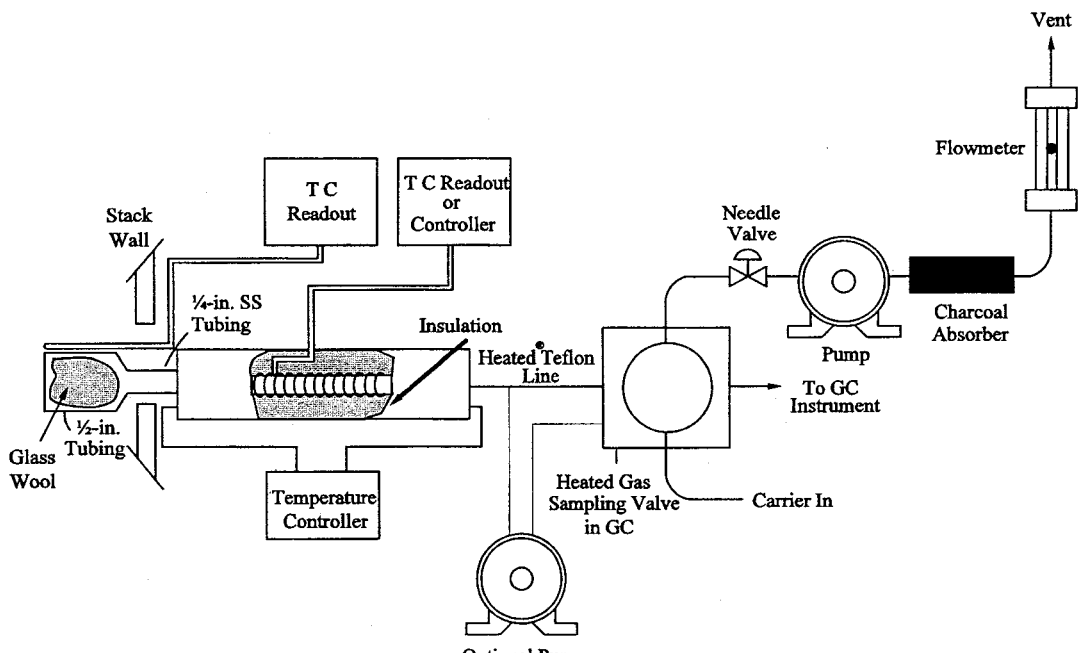

Figure 18-12. Direct Interface Sampling System.