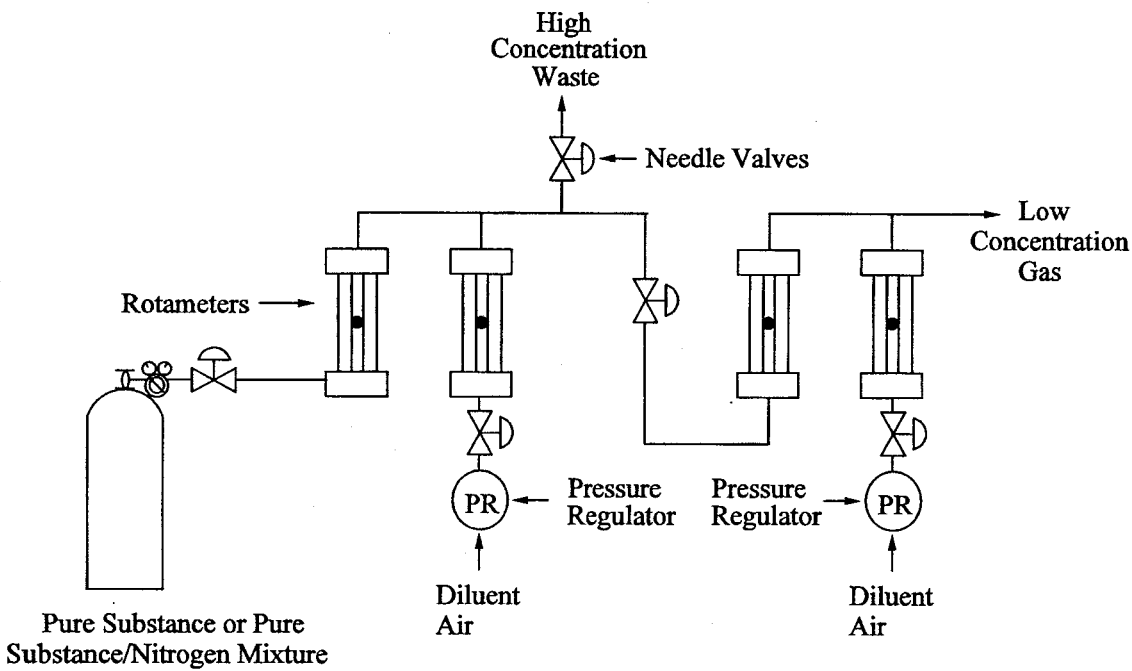

Figure 18-6. Two-Stage Dilution Apparatus.