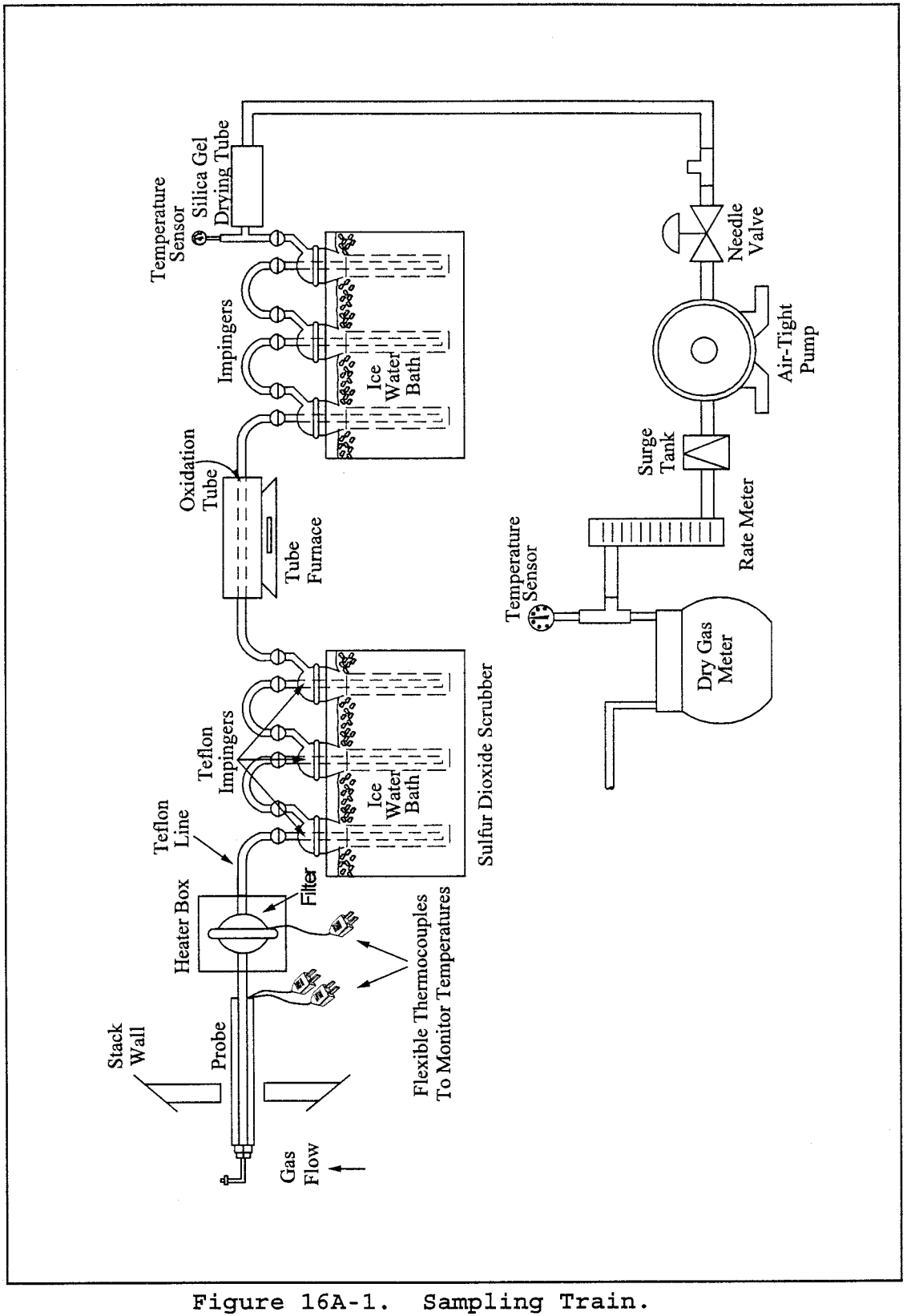

Figure 16A-1. Sampling Train.