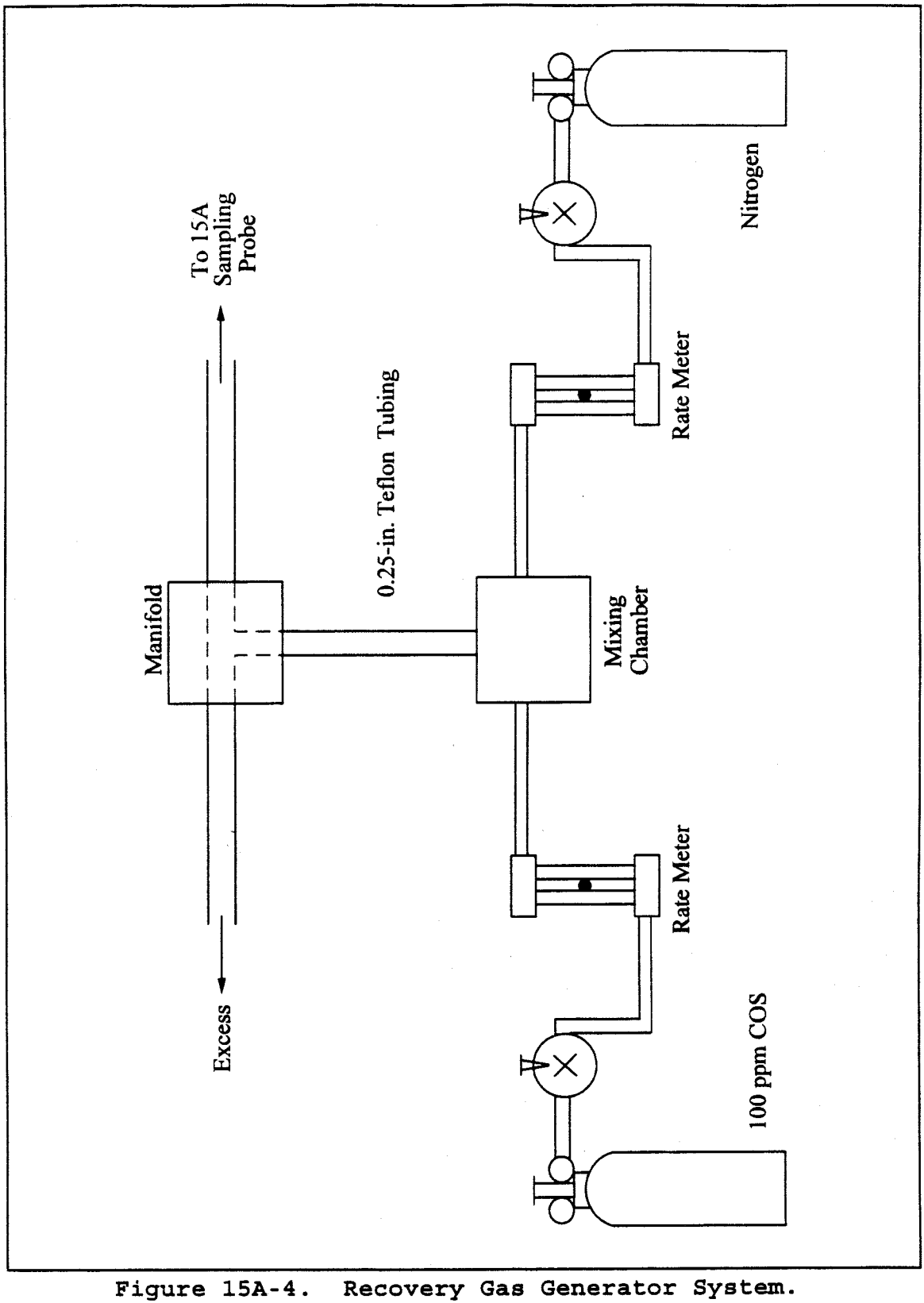

Figure 15A-4. Recovery Gas Generator System.