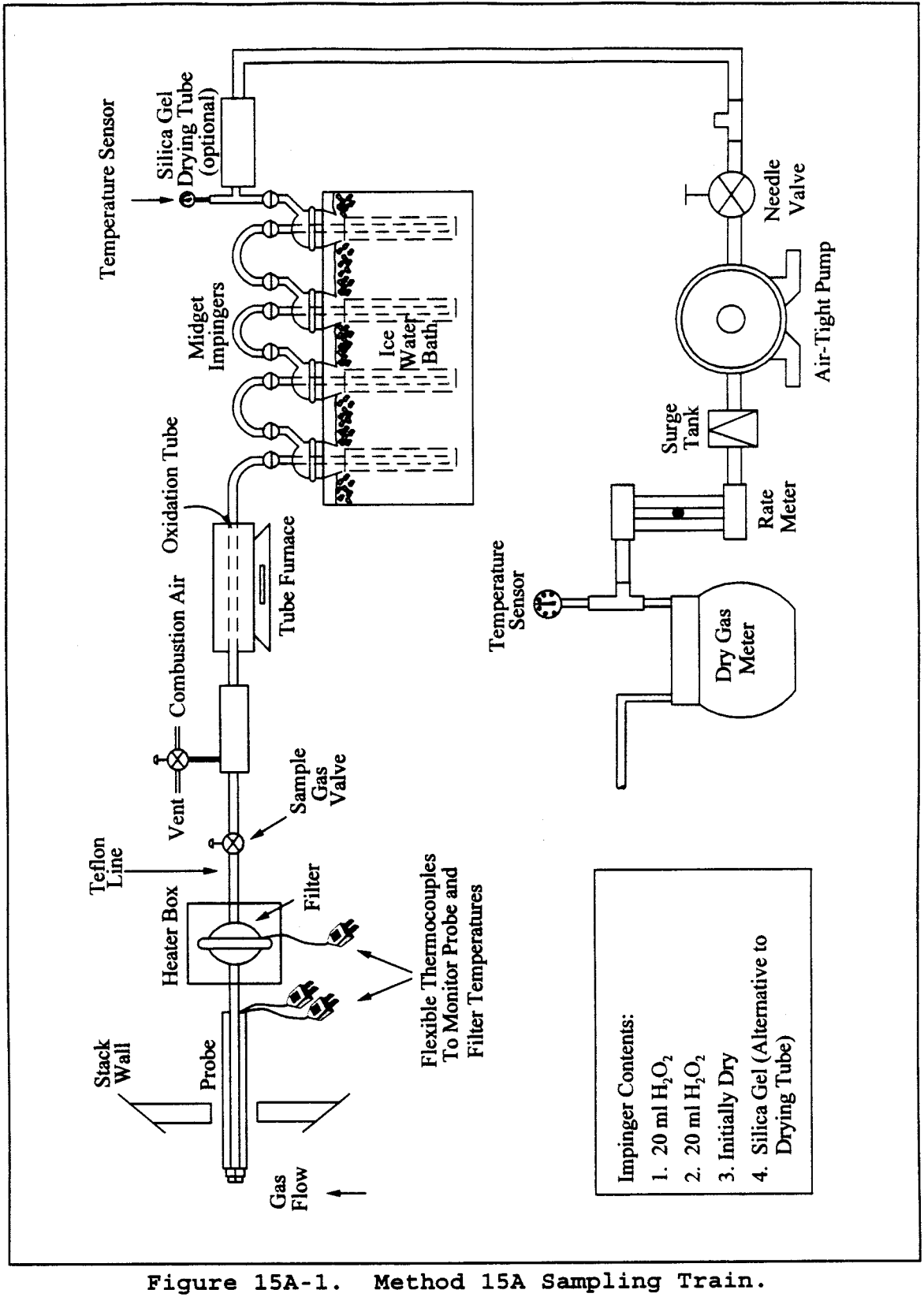

Figure 15A-1. Method 15A Sampling Train.