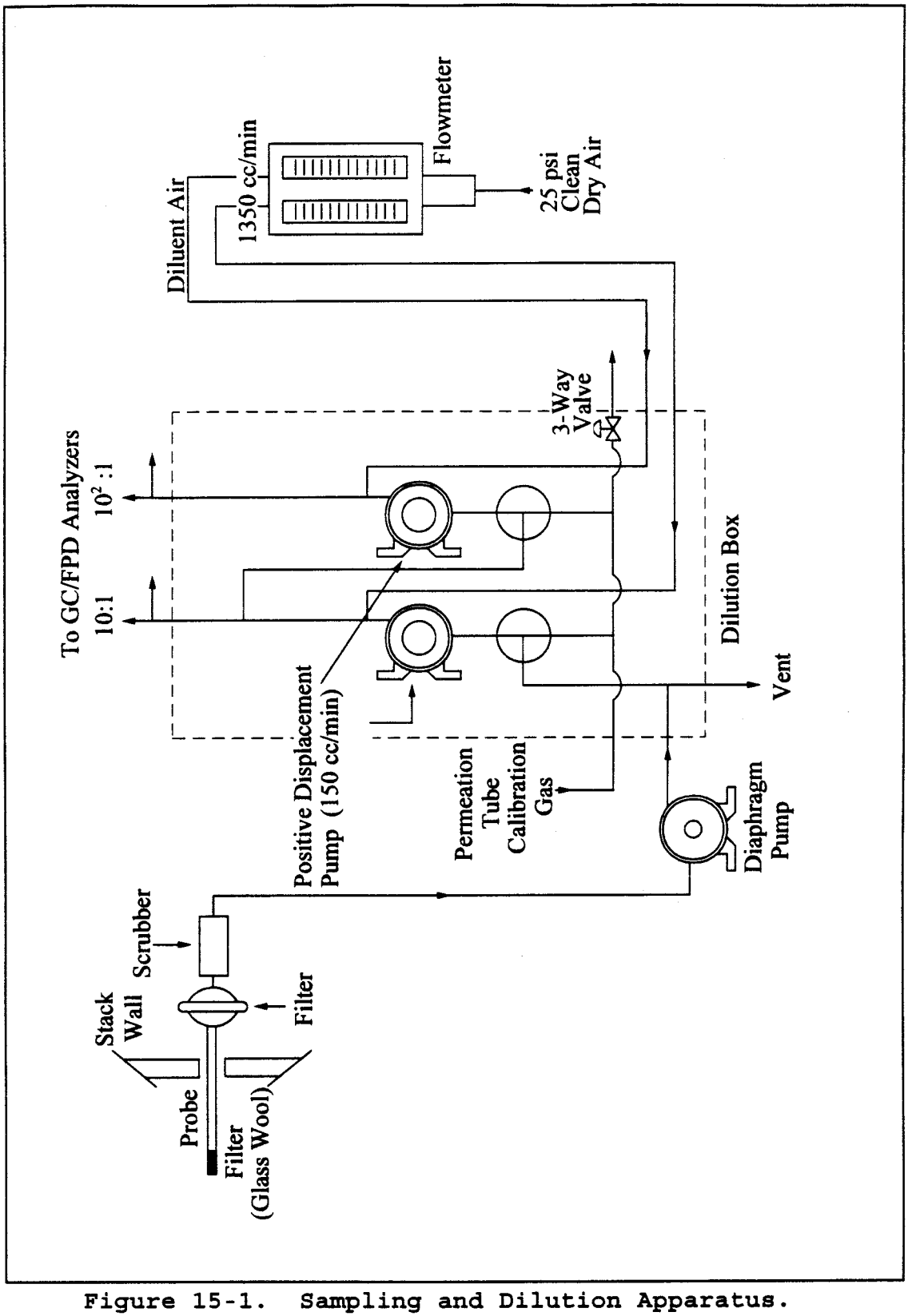

Figure 15-1. Sampling and Dilution Apparatus.