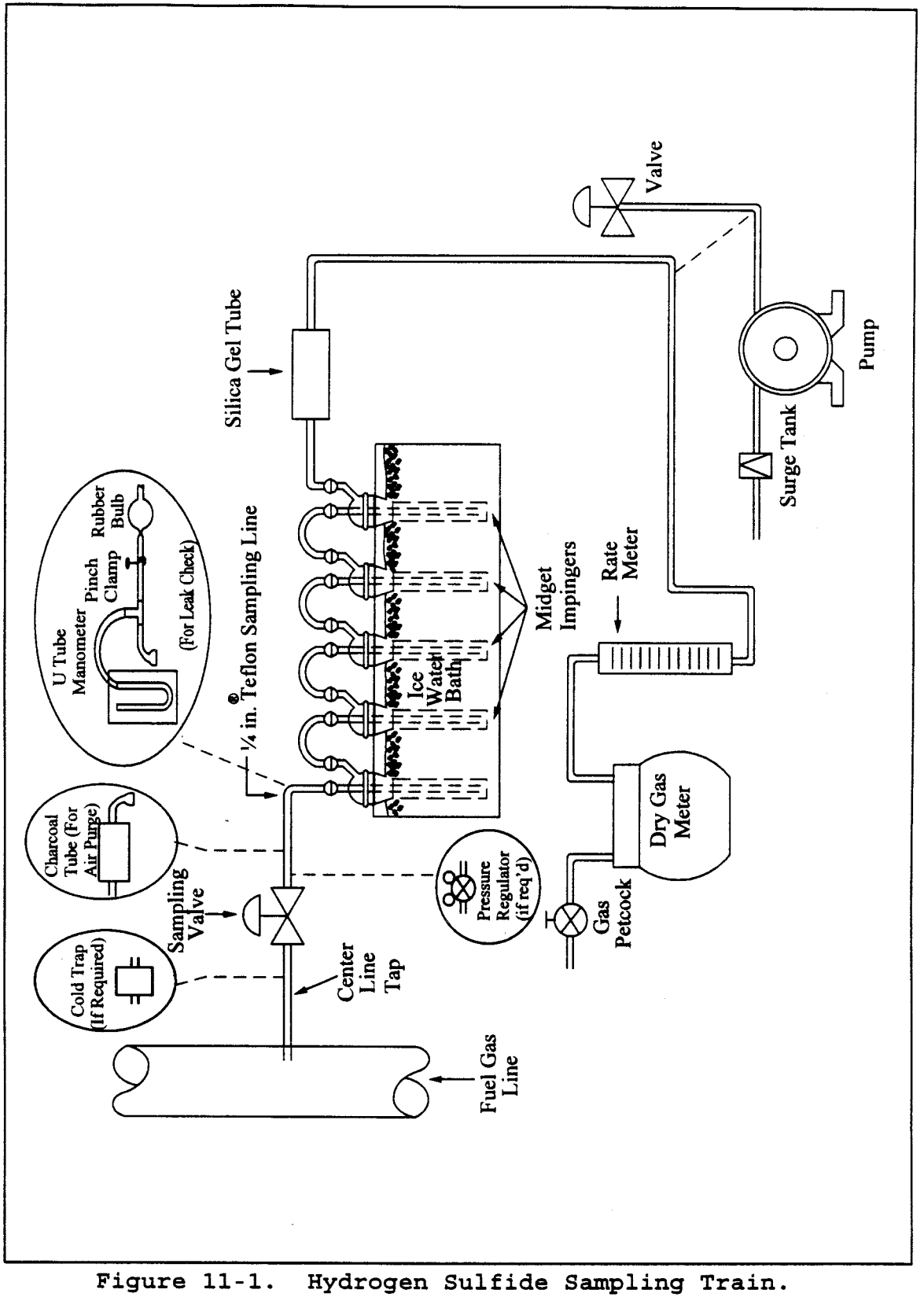

Figure 11-1. Hydrogen Sulfide Sampling Train.