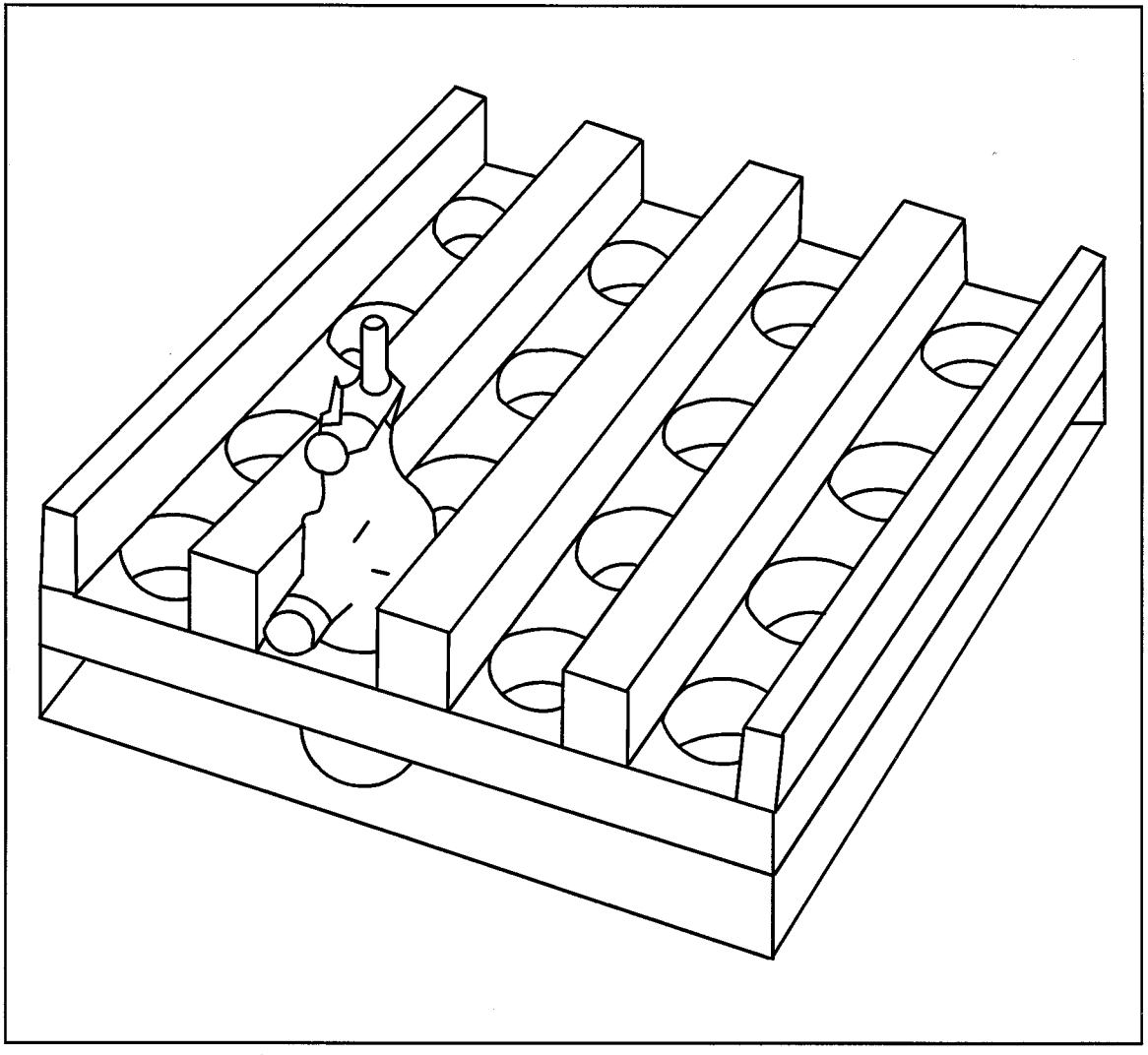

Figure 10A-4. Shaker Table Adapter.