Reference 230.58(b)
Drawing 13
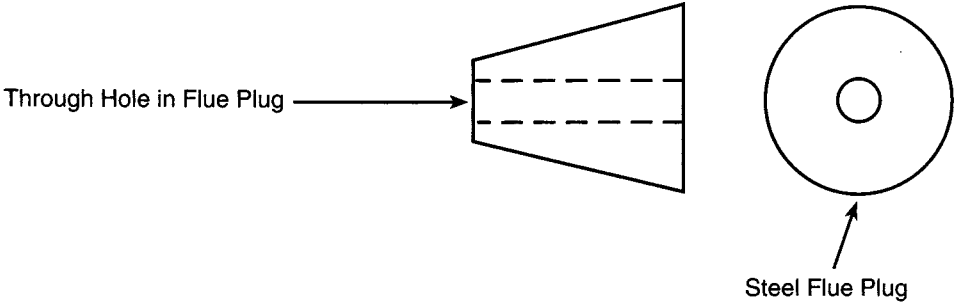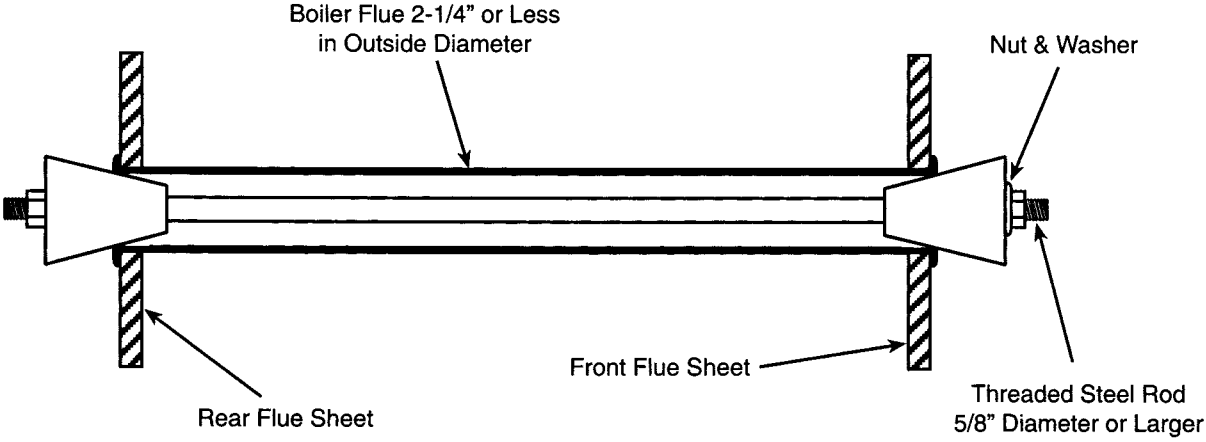
INSTALLATION OF FLUE PLUG