FIGURE 7

SUSPENSION STRAND DEADENDING ON BUILDINGS

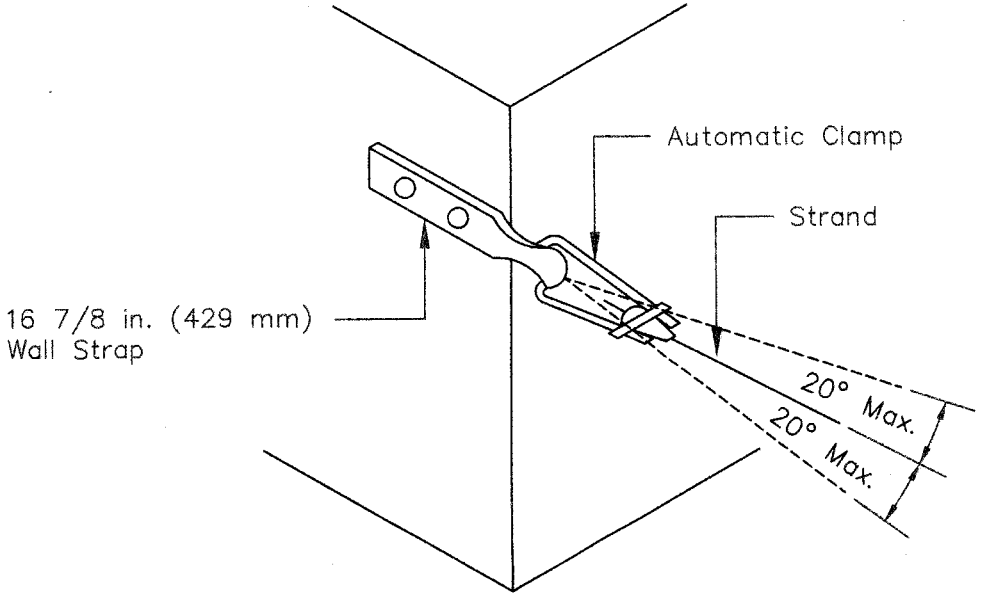

SKETCH A: PULL ALONG LINE OF BUILDING WALL

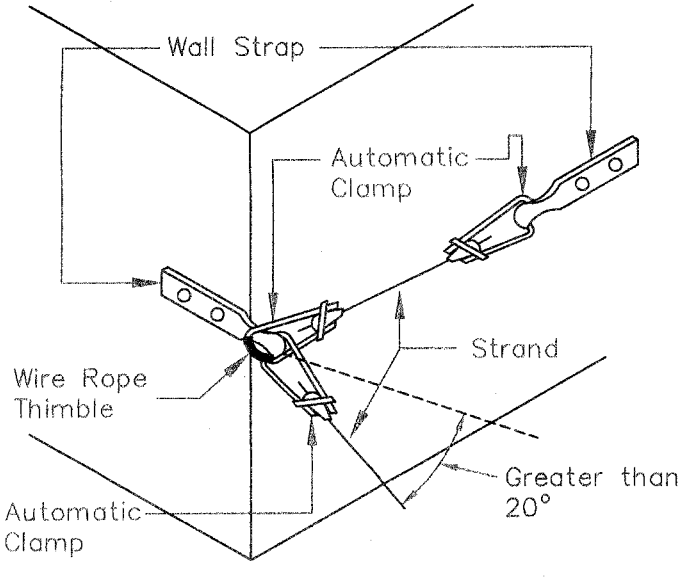

SKETCH B: ANGLE PULL FROM BUILDING WALL

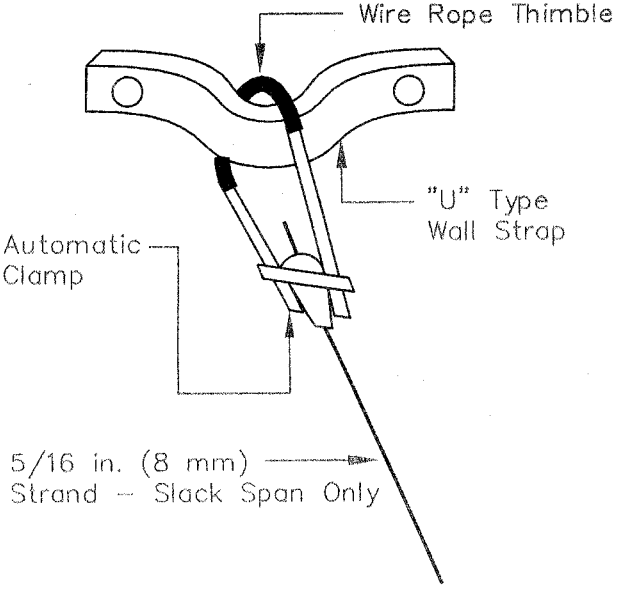

SKETCH C: PULL FROM FACE OF WALL