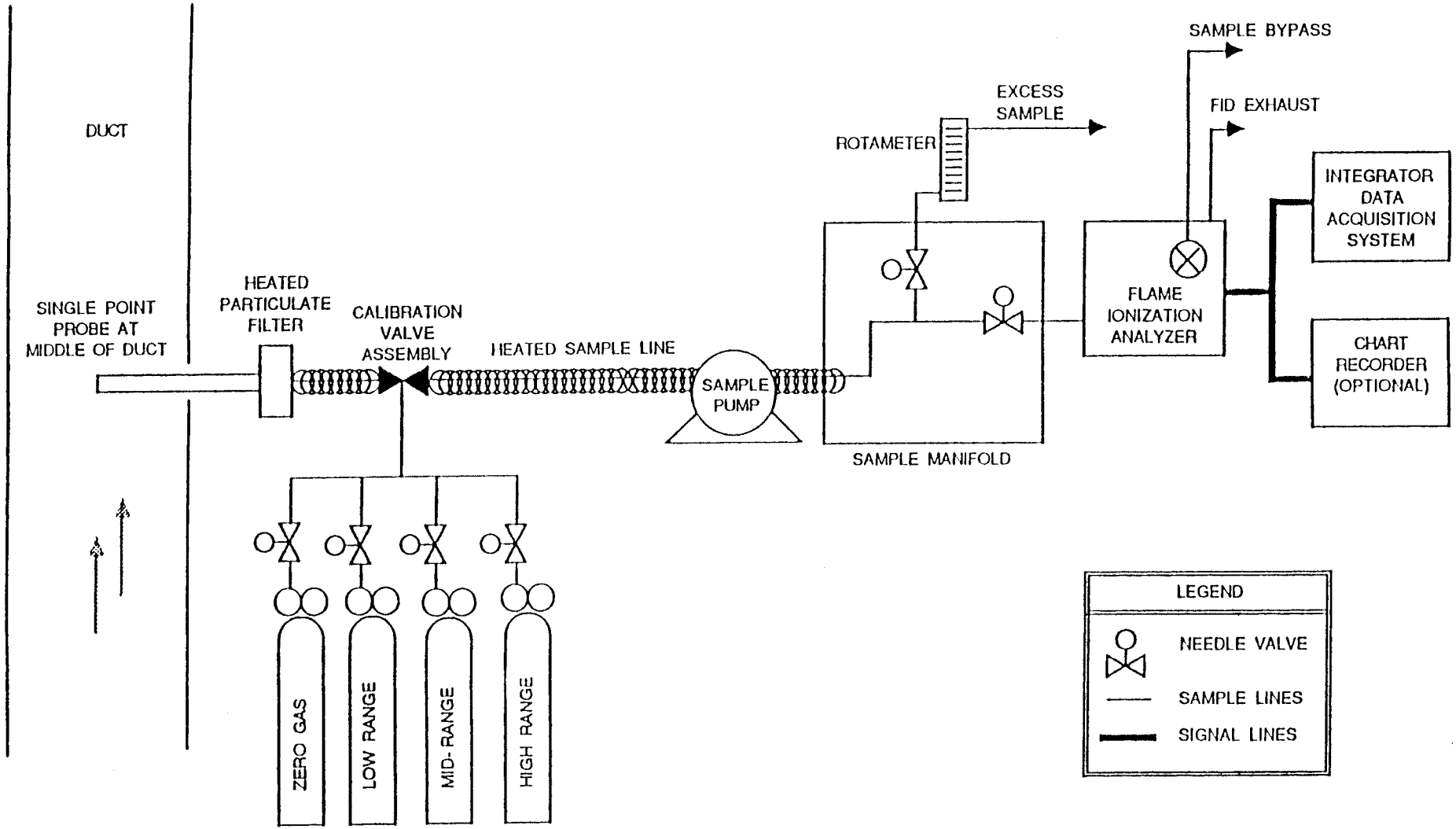

Figure 204B-1. Gas VOC concentration measurement system.