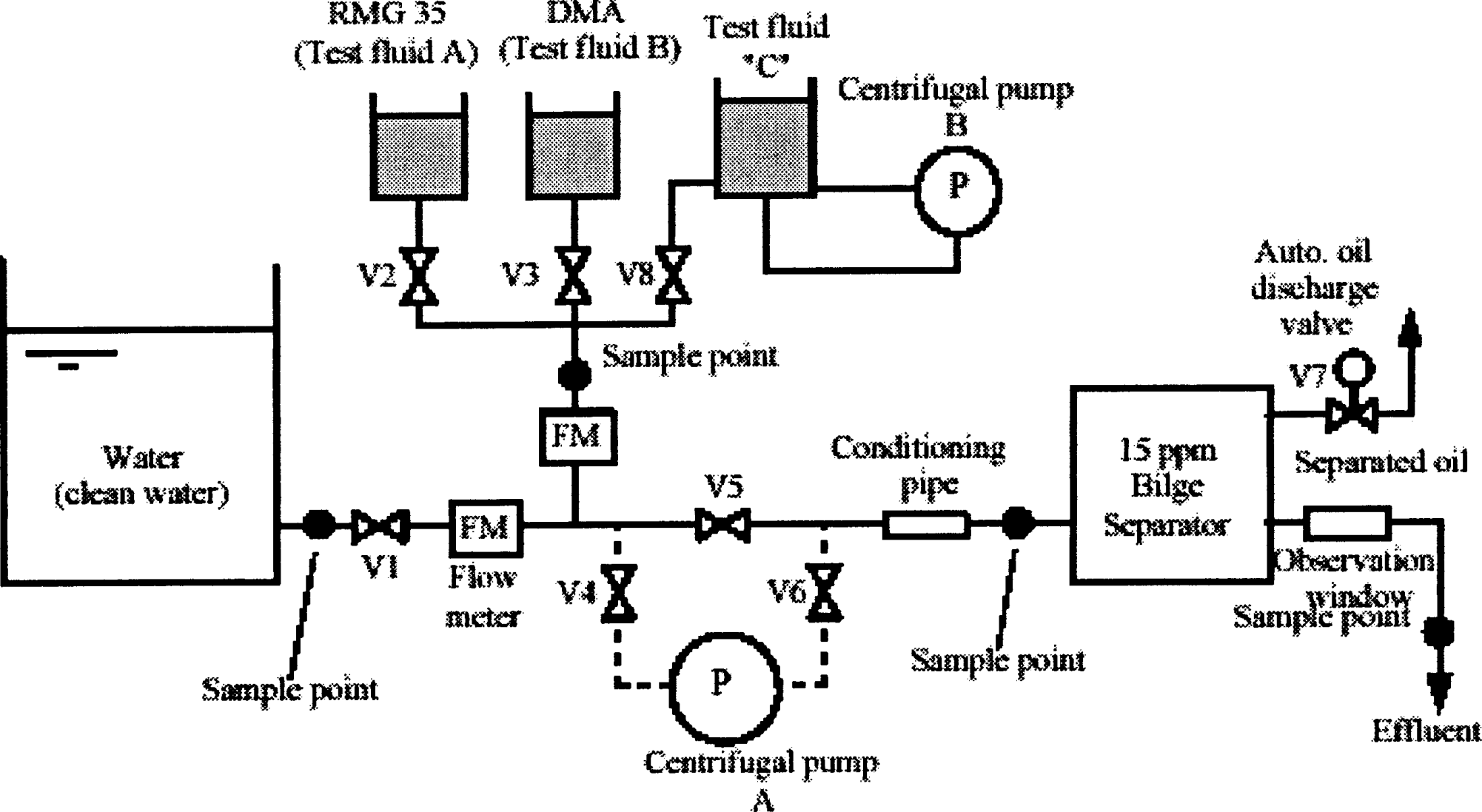
RMG 35
(Test fluid A)
DMA
(Test fluid B)
Test fluid
"C"
Centrifugal pump
B
P
V2
V3
V8
Sample point
Water
(clean water)
FM
V1
FM
Flow
meter
V4
V5
V6
Conditioning
pipe
P
Centrifugal pump
A
Sample point
Sample point
15 ppm
Bilge
Separator
Auto. oil
discharge
valve
V7
Separated oil
Observation
window
Sample point
Effluent