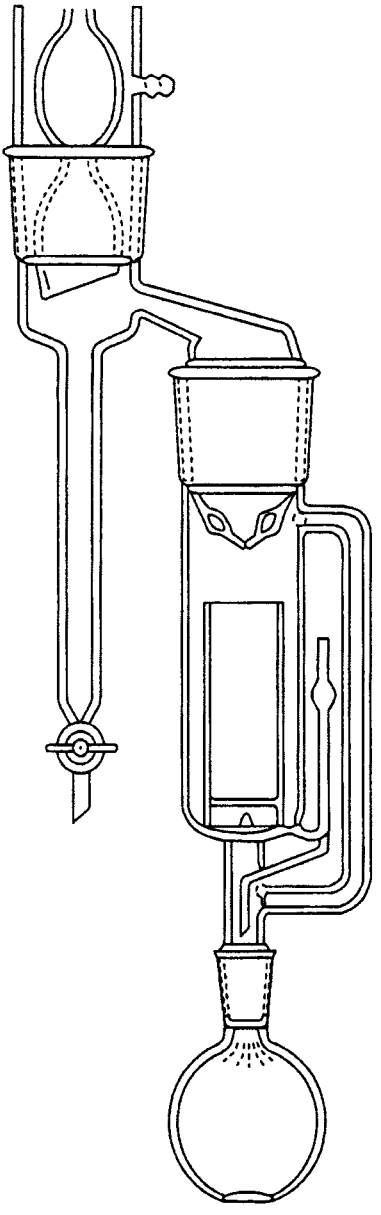

52-027-2A

Figure 5. Soxhlet/Dean-Stark Extractor