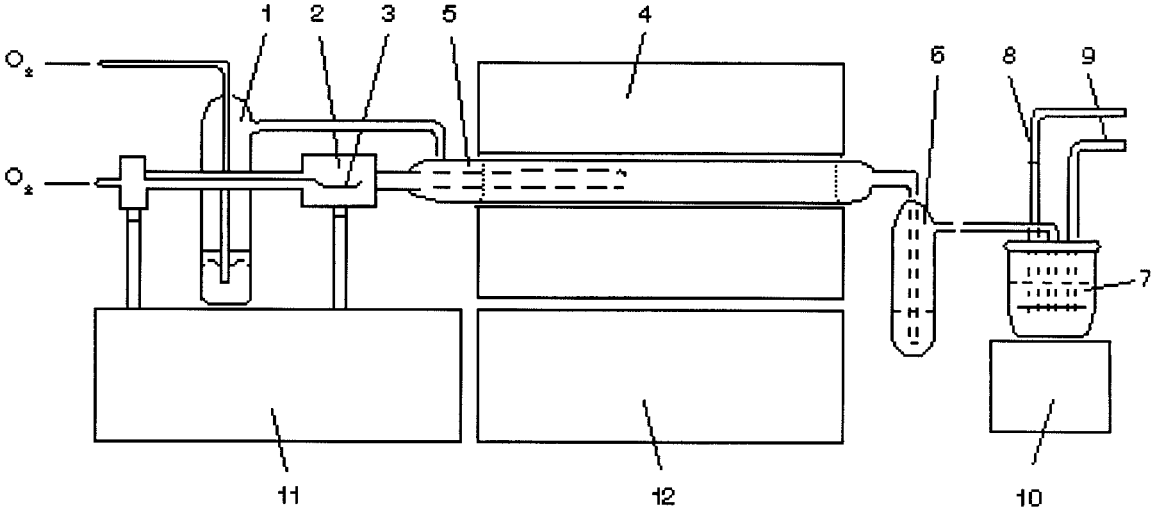

1. Stripping Device
2. Sample inlet for AOX
3. AOX Sample
4. Furnace
5. Combustion Tube
6. Absorber filled with H_2SO_4
7. Titration cell
8. Working electrodes
9. Measuring electrodes
10. Stirrer
11. Titration micro-processor
12. Gas flow and temperature control device

Figure 4. Schematic of an AOX Apparatus