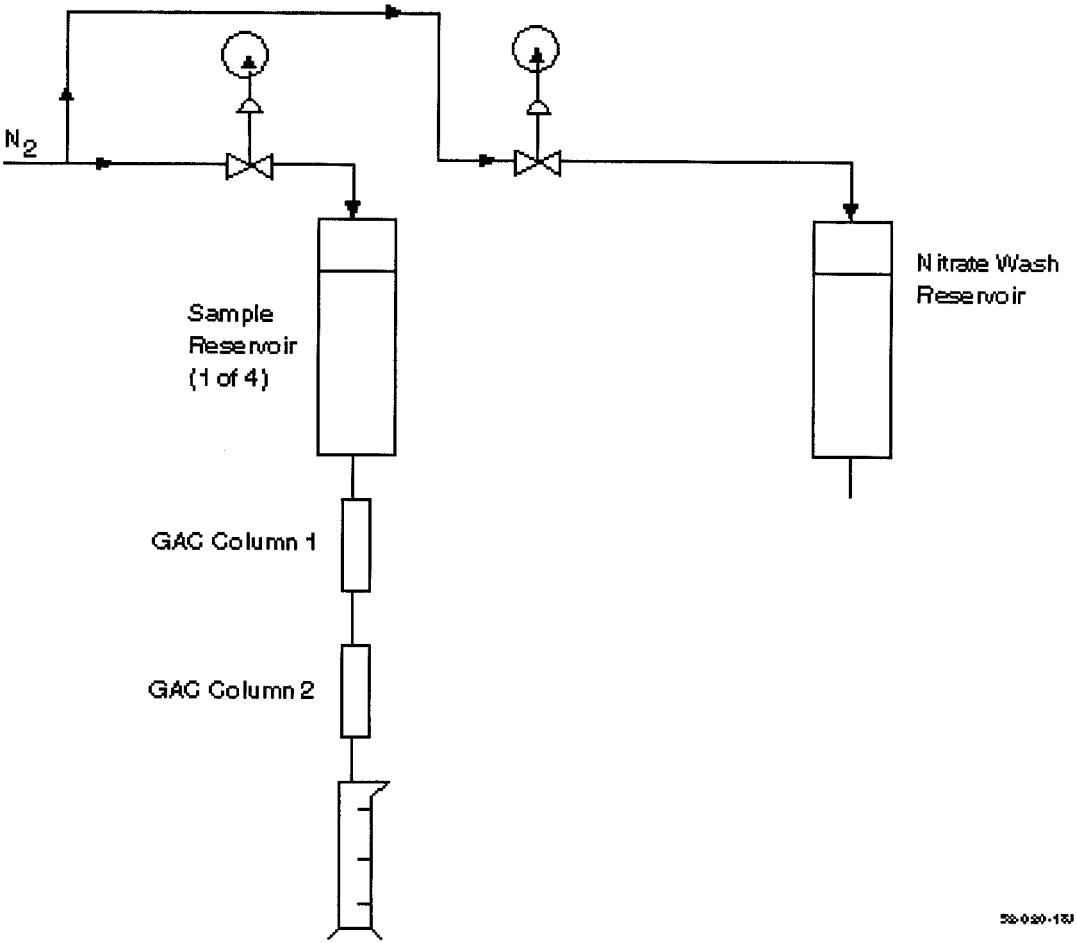

Figure3. Schematic of the Column Adsorption System