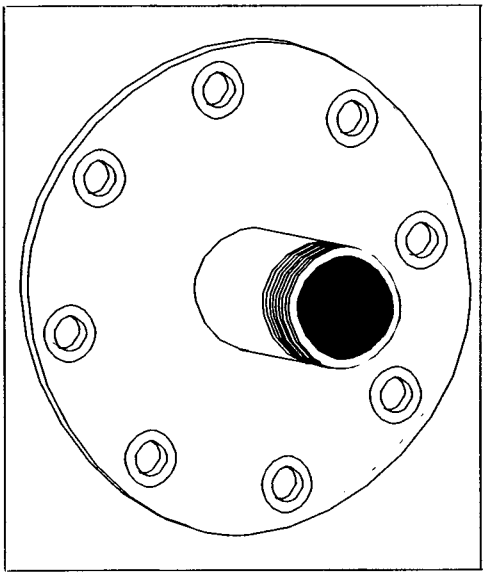

Figure 2G-3. Example bushing sleeve.

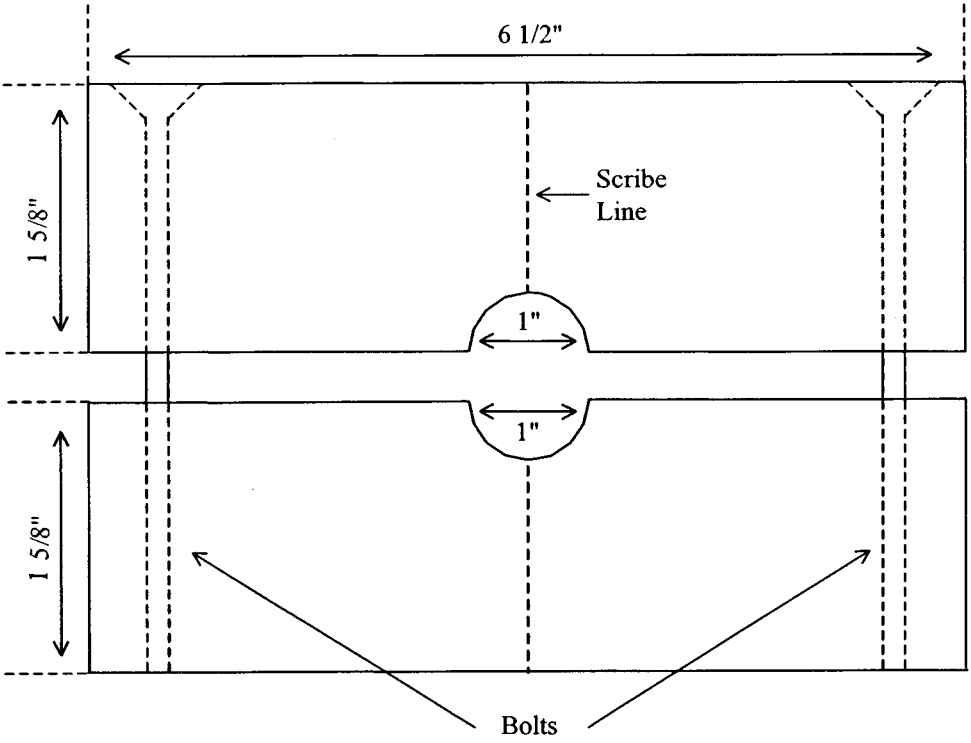

Figure 2G-4. Rotational position collar block.