Figure 8

Large Headform – Interior Design

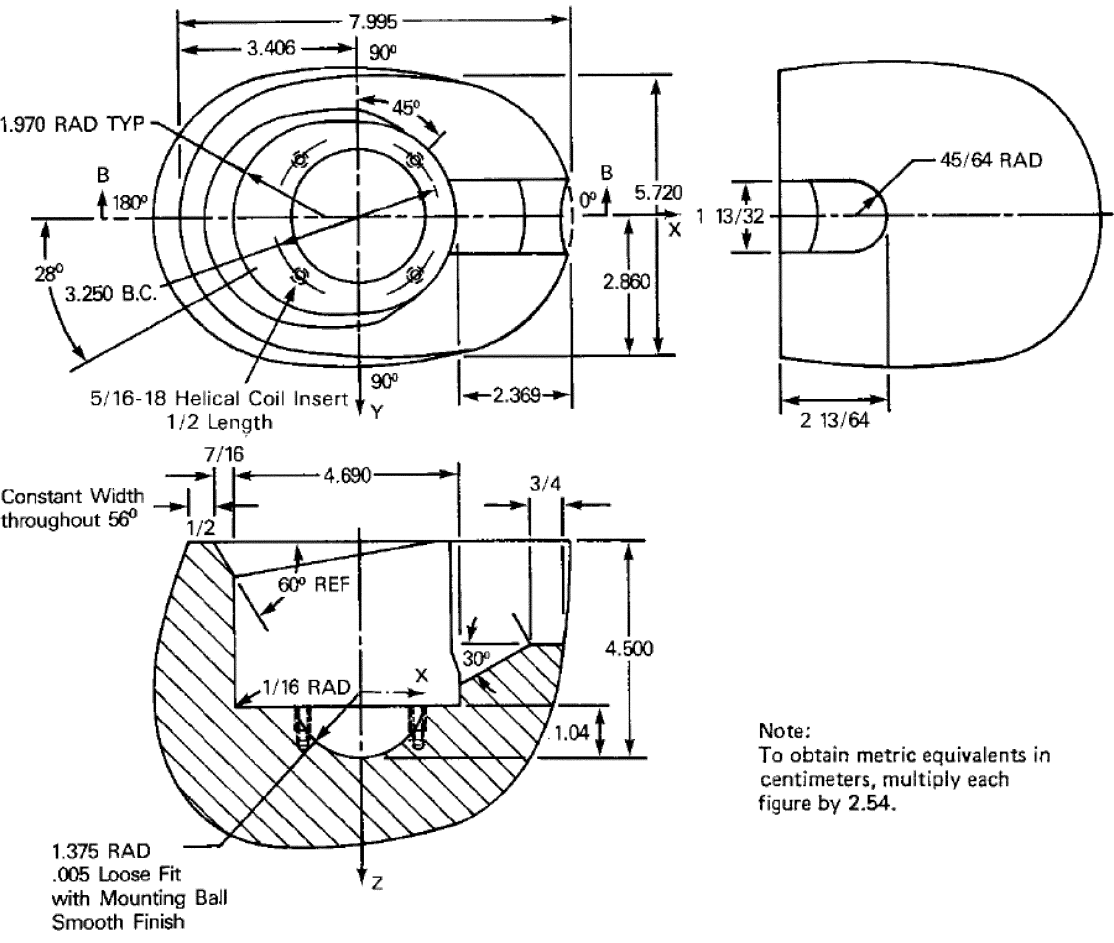


Note:
To obtain metric equivalents in centimeters, multiply each figure by 2.54.