Figure 7

Medium Headform – Interior Design

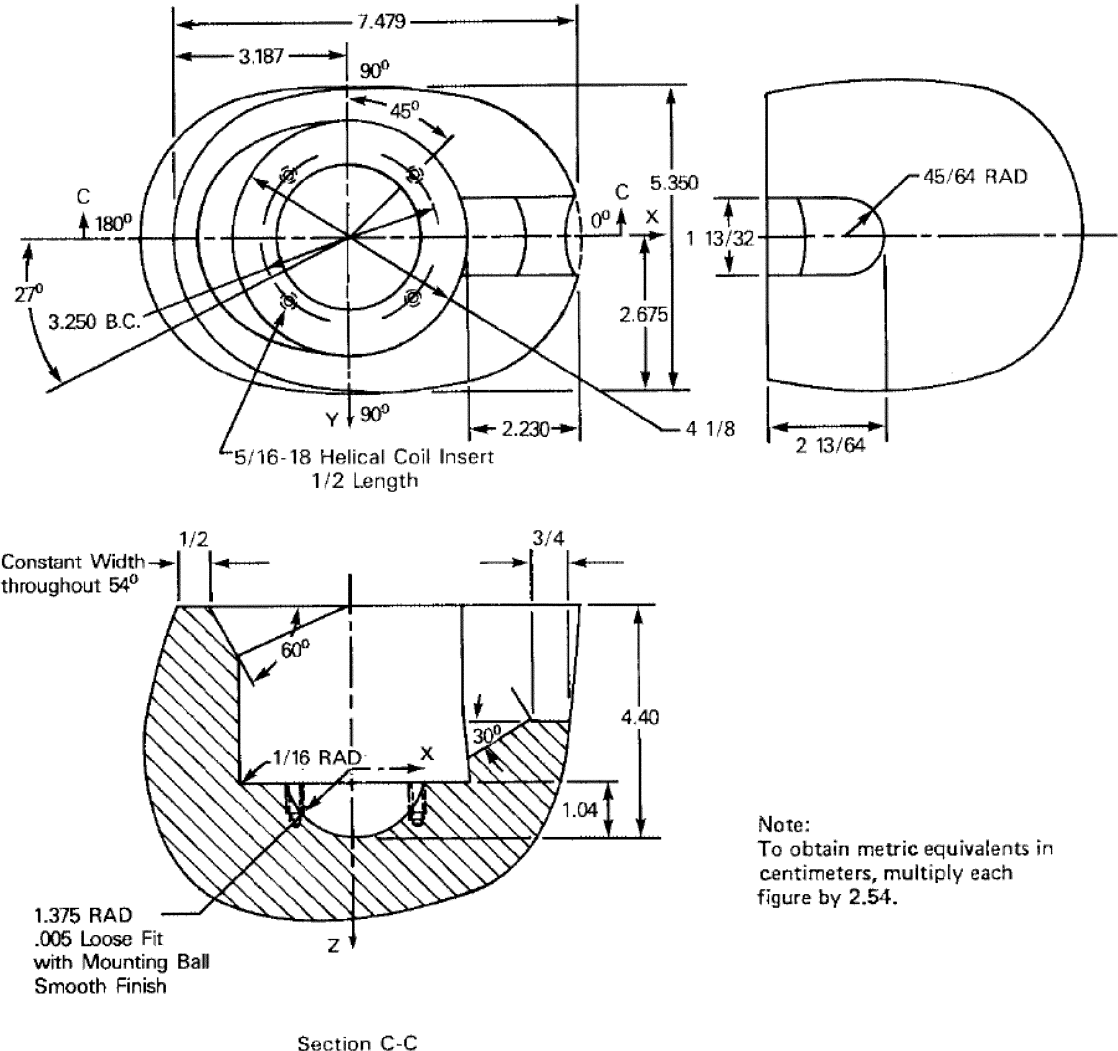

Note:
To obtain metric equivalents in centimeters, multiply each figure by 2.54.