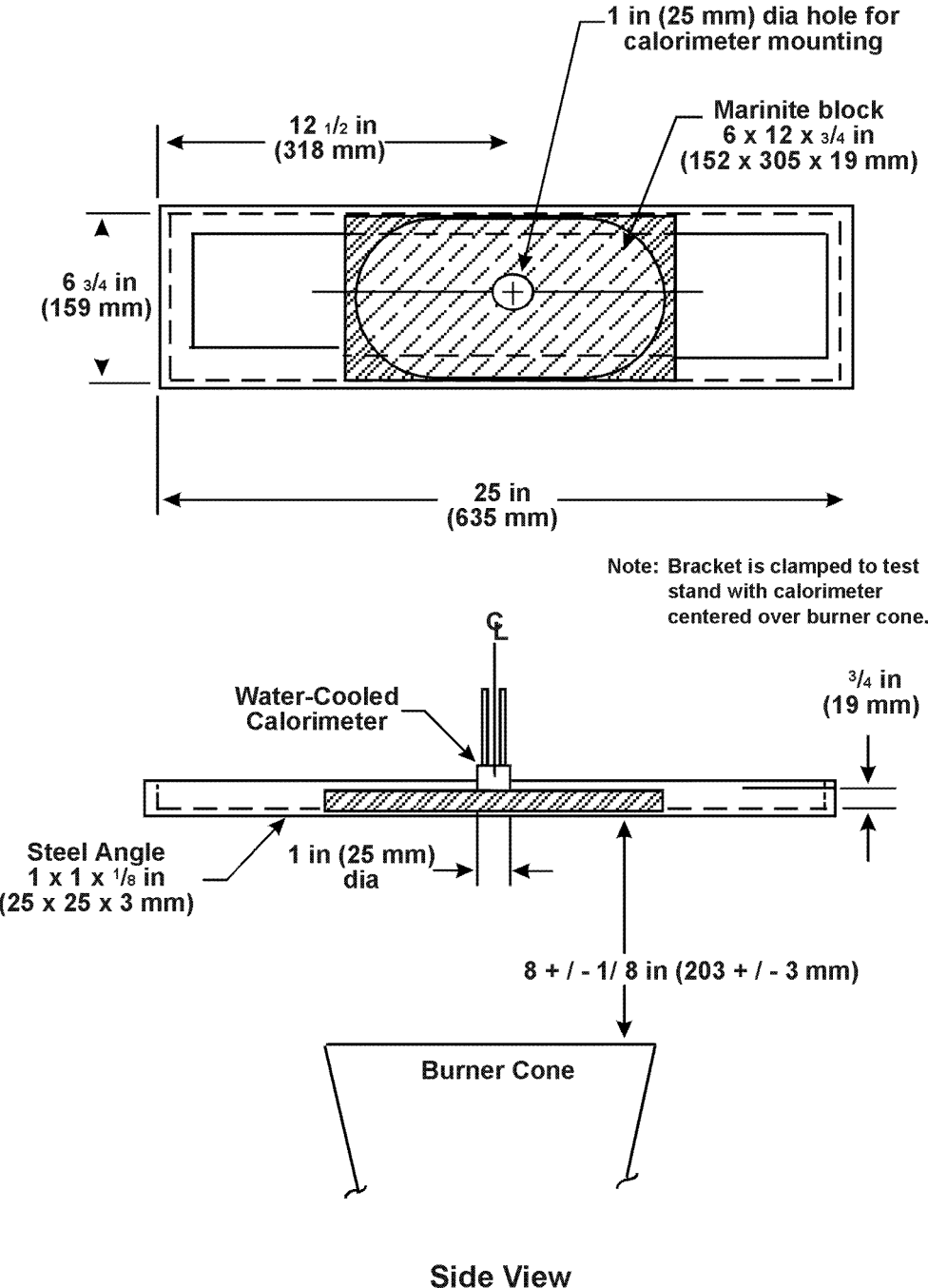Figure 2: Calorimeter Bracket