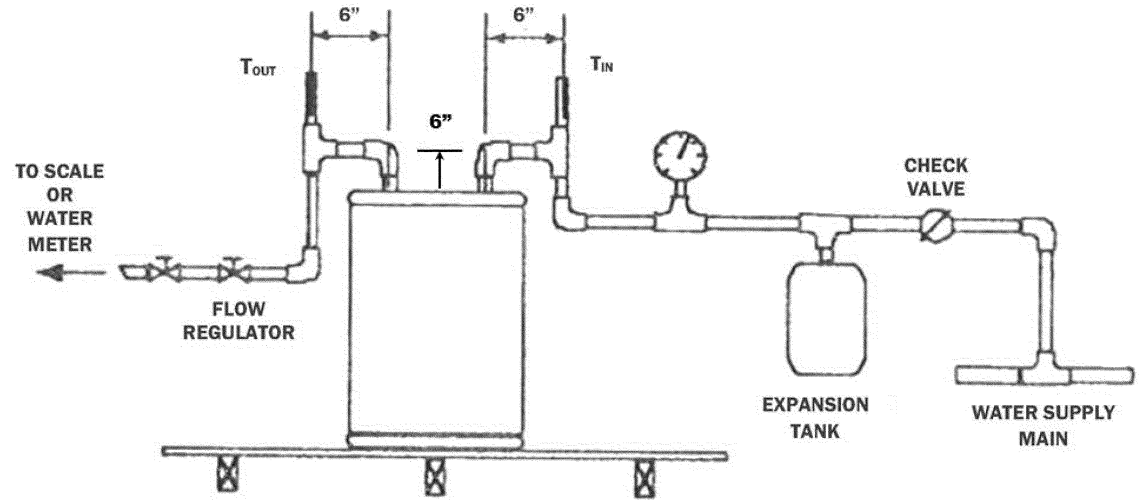


Figure 4.

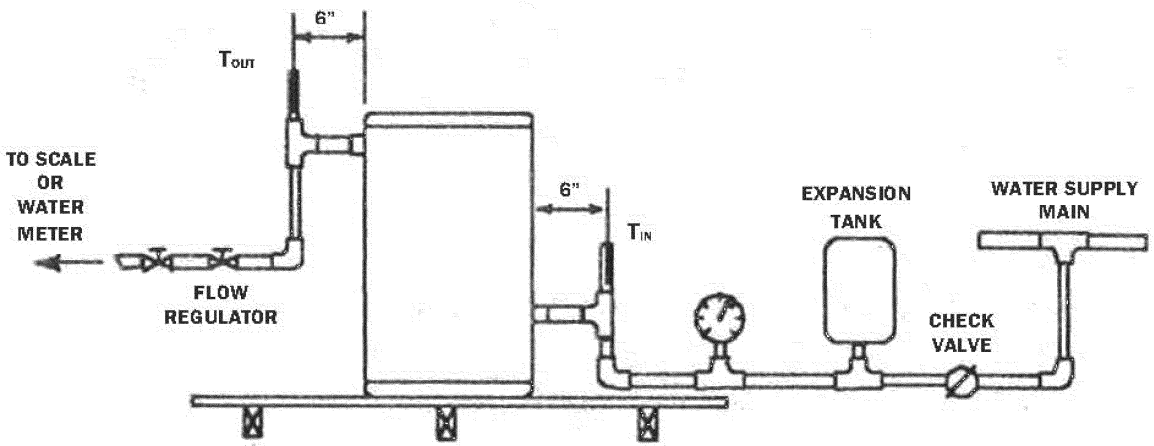


Figure 5.