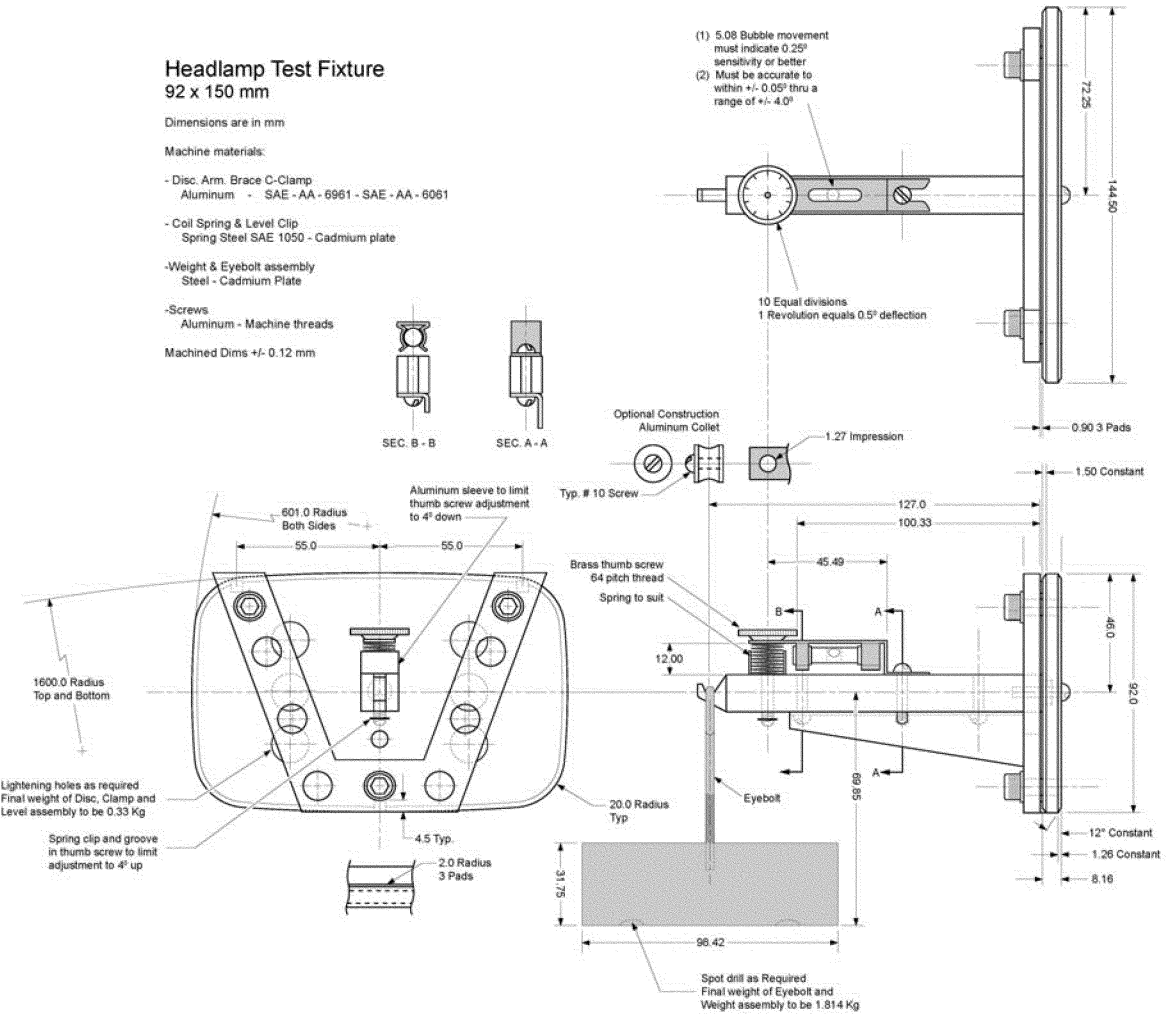

92 x 150 mm HEADLAMP AIM DEFLECTION TEST SETUP

FIGURE 14