Figure 4 to Subpart A of Part 1211—Moving Obstruction

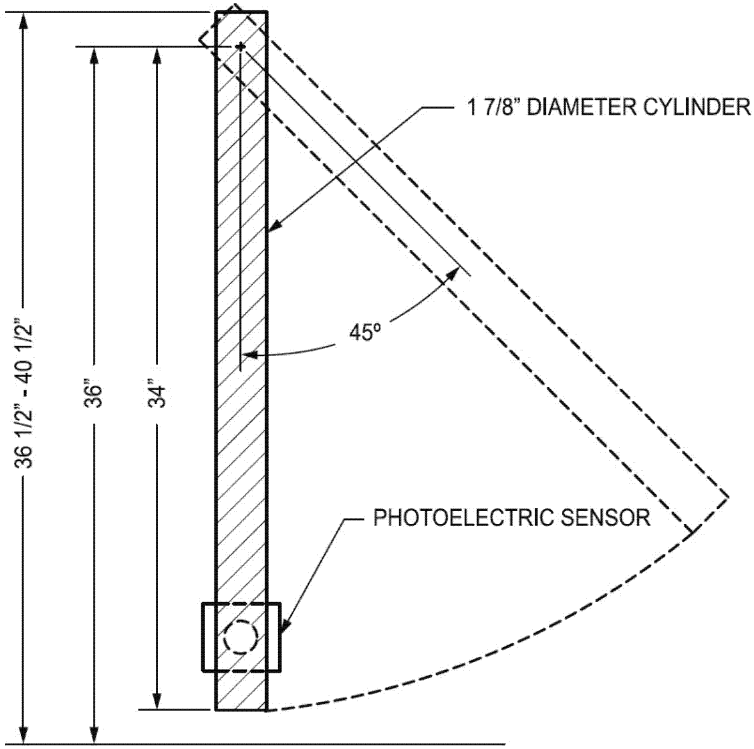
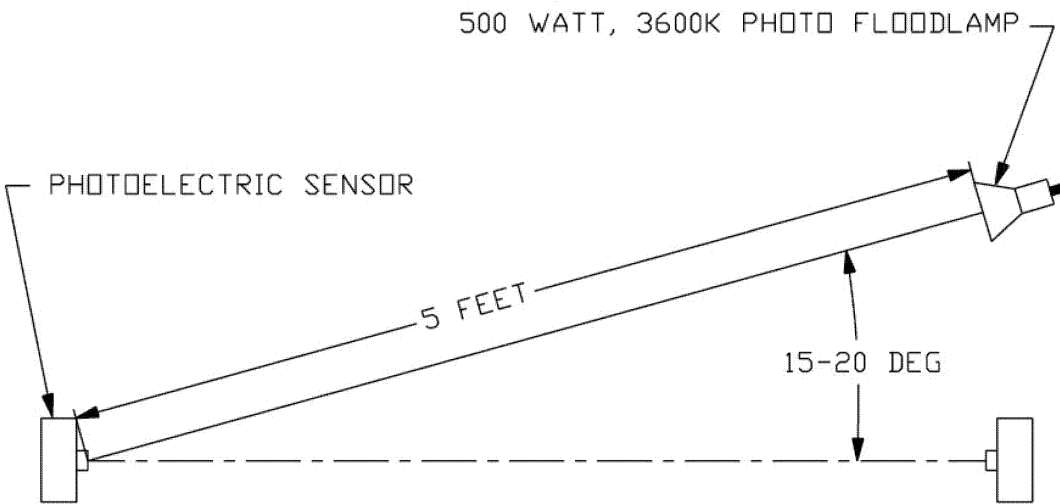
Figure 5 to Subpart A of Part 1211—Ambient Light Test