Figure 2 to Subpart A of Part 1211—Nozzle SECTION A-A

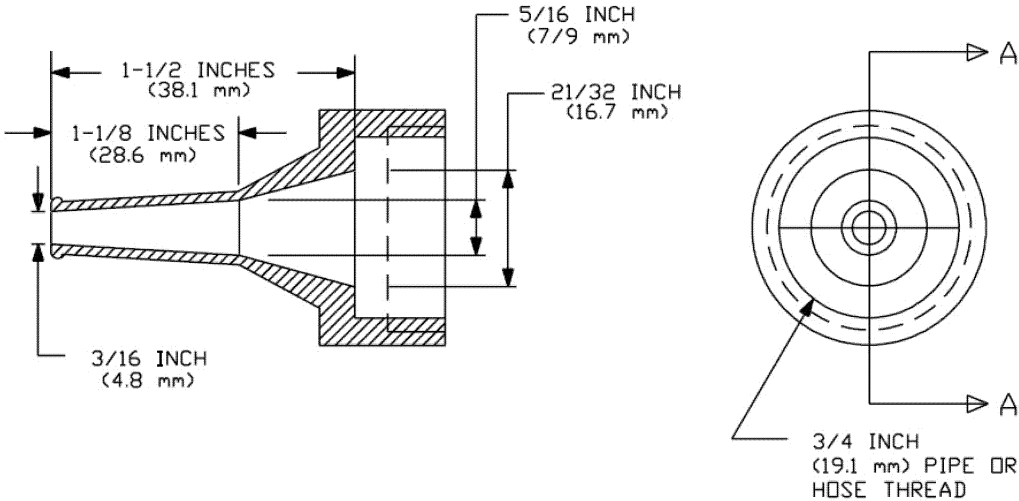
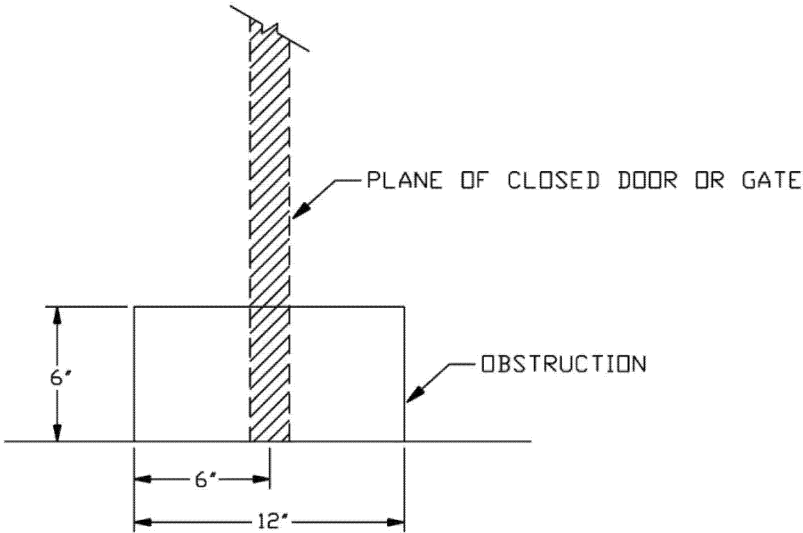
Figure 3 to Subpart A of Part 1211—Stationary Obstruction