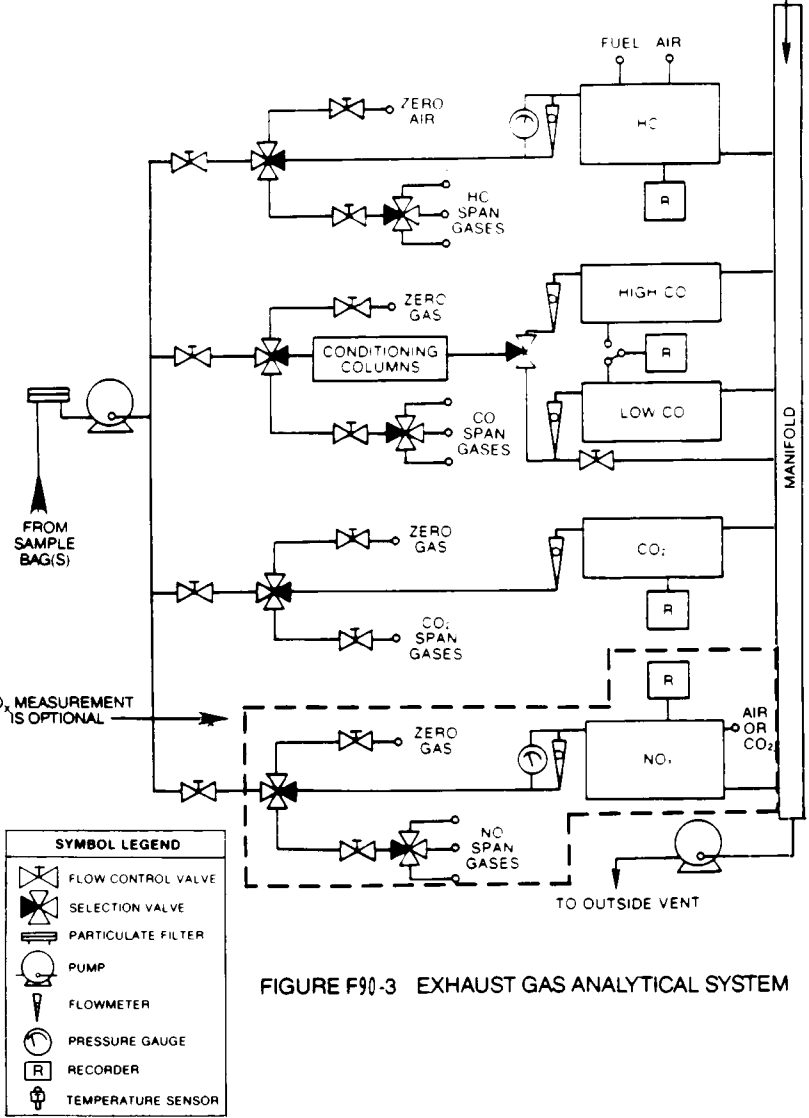

FIGURE F90-3 EXHAUST GAS ANALYTICAL SYSTEM