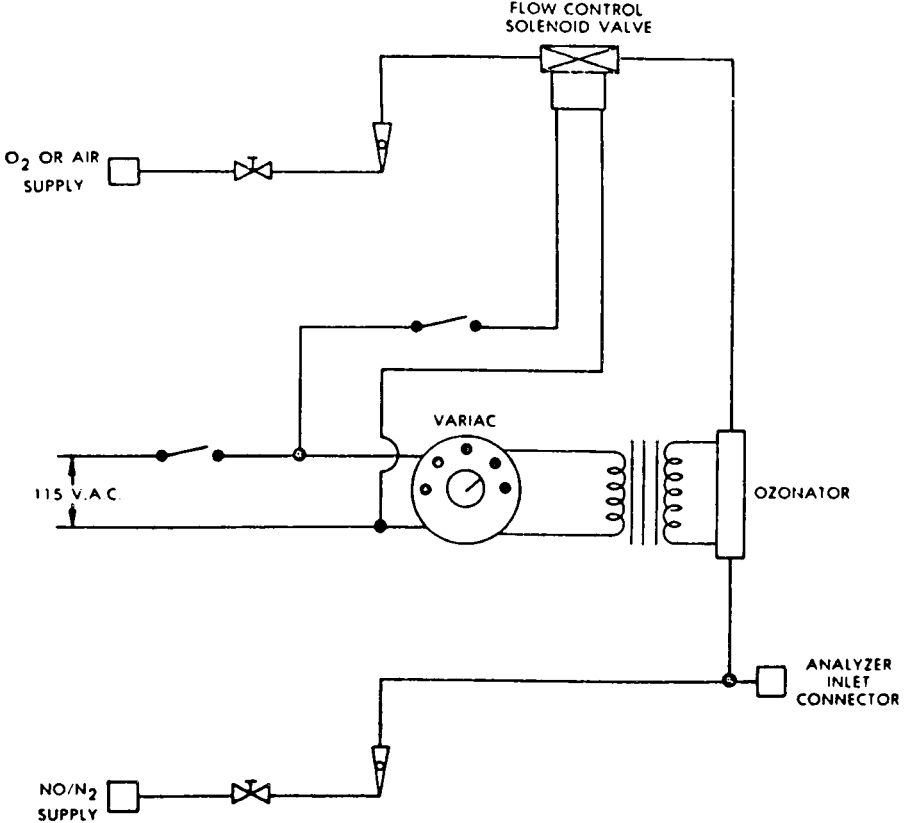

(SEE FIG B78-3 FOR SYMBOL LEGEND)

FIGURE B78-9—NOx CONVERTER EFFICIENCY DETECTOR