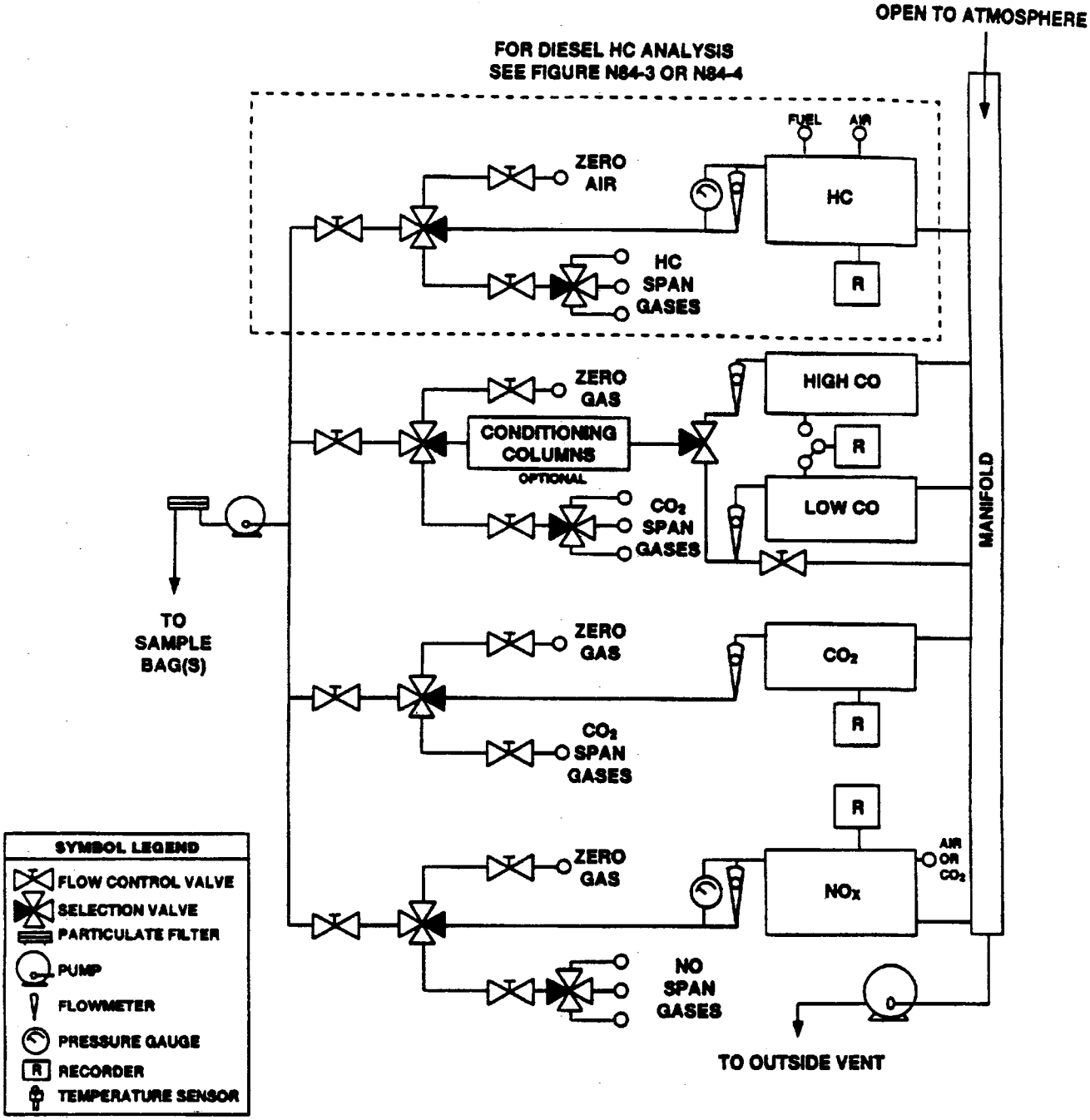

Figure 4. — Exhaust Gas Analytical System