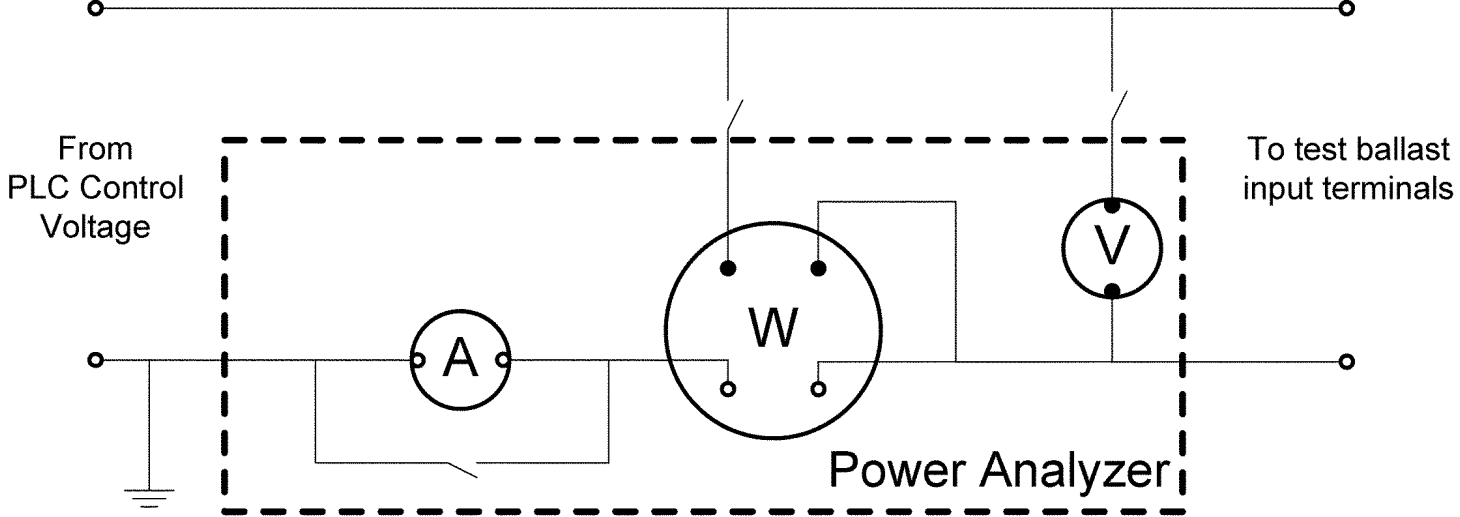

Figure 6: Circuit for Measuring PLC Control Signal Power in Standby Mode