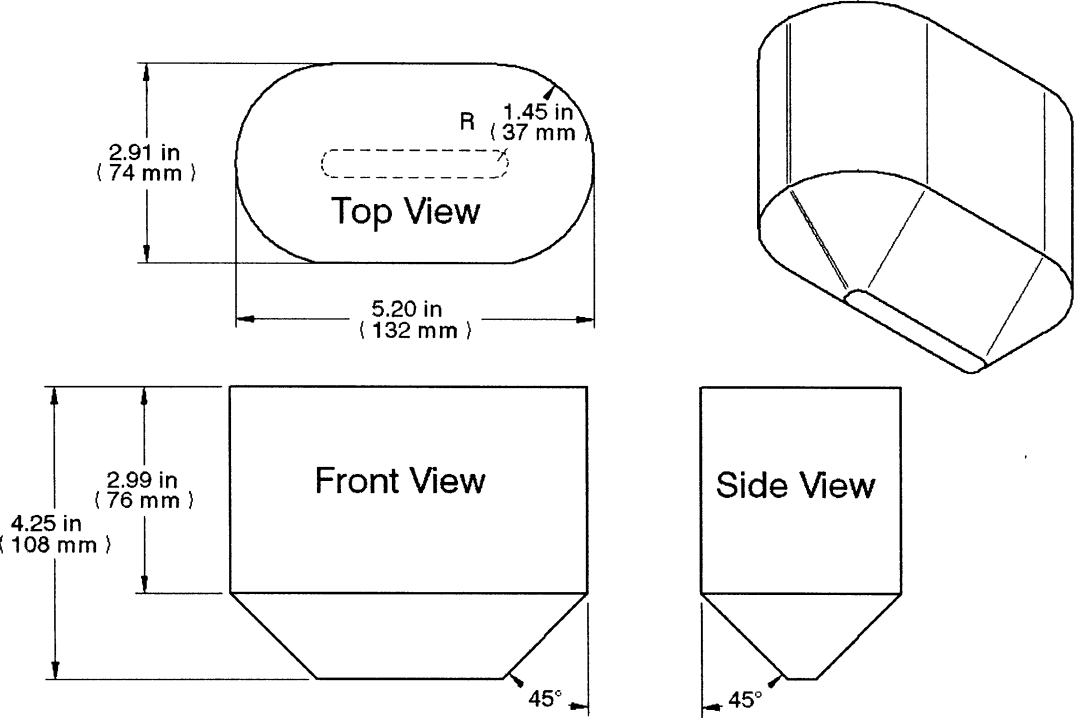

Figure 4: Modified Bath Seat Torso Probe