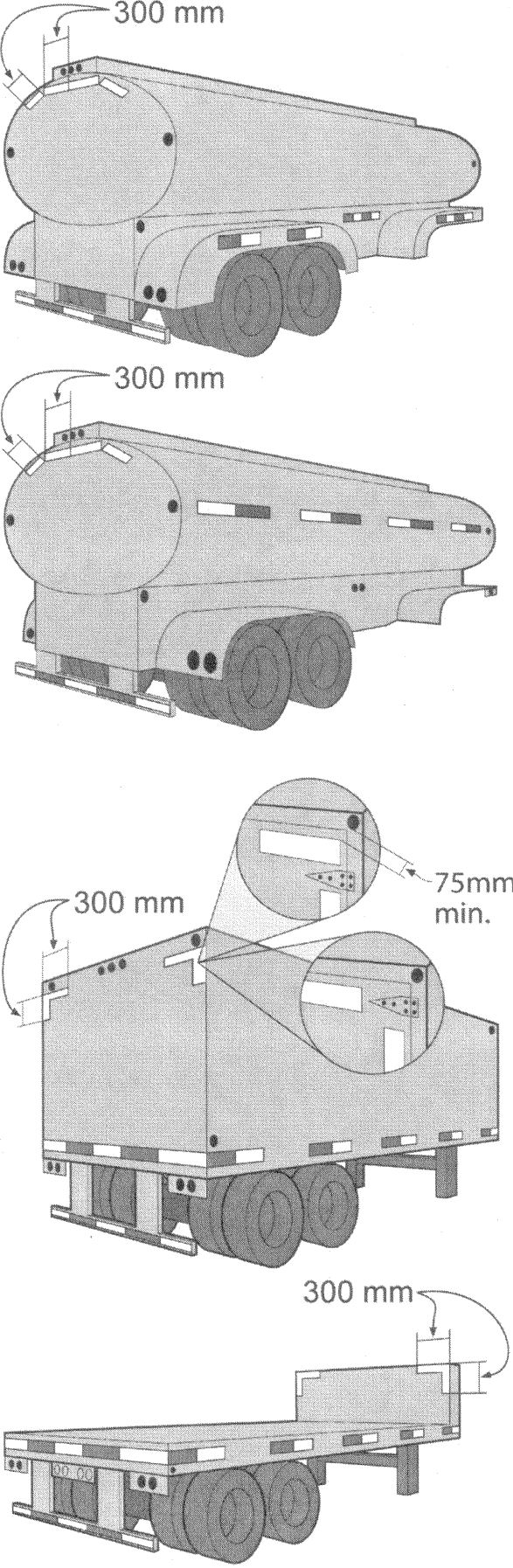

Trailer Conspicuity
Treatment Examples

FIGURE 11