FIGURE 15

FIBER OPTIC CENTRAL OFFICE SPLICE LOSS MEASUREMENT

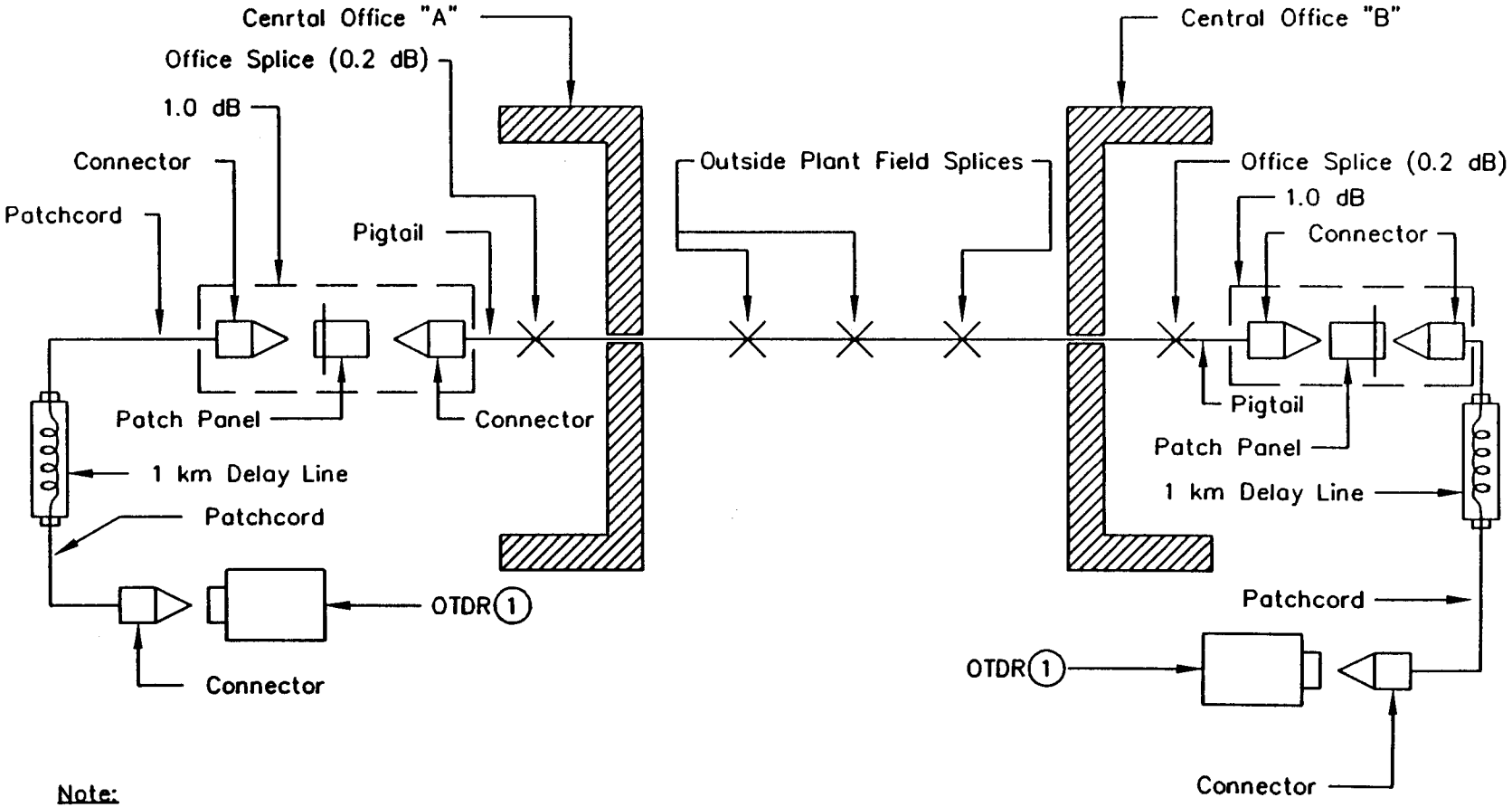

Note:

(1.) Tektronix–TFP2, H.P.–8146A, Opto–Electonics–DFM10, Photo Kinetics–6000, or equivalent.