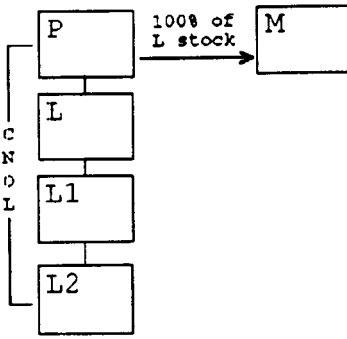
P
100% of
L stock
M
L
NOL
L1
L2

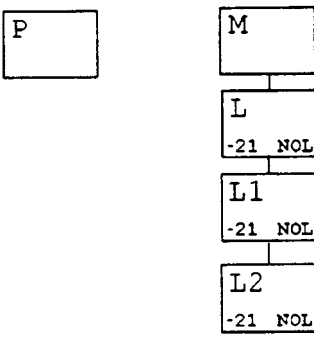
P
M
L
-21 NOL
L1
-21 NOL
L2
-21 NOL

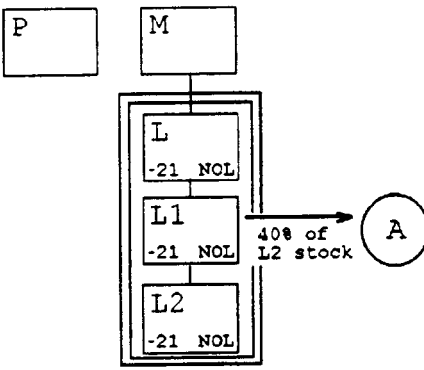
P
M
L
-21 NOL
L1
-21 NOL
40% of
L2 stock
A
L2
-21 NOL

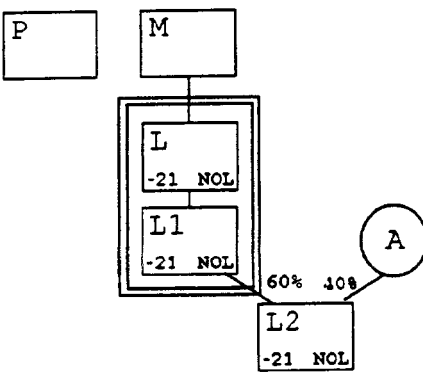
P
M
L
-21 NOL
L1
-21 NOL
A
60%
40%
L2
-21 NOL