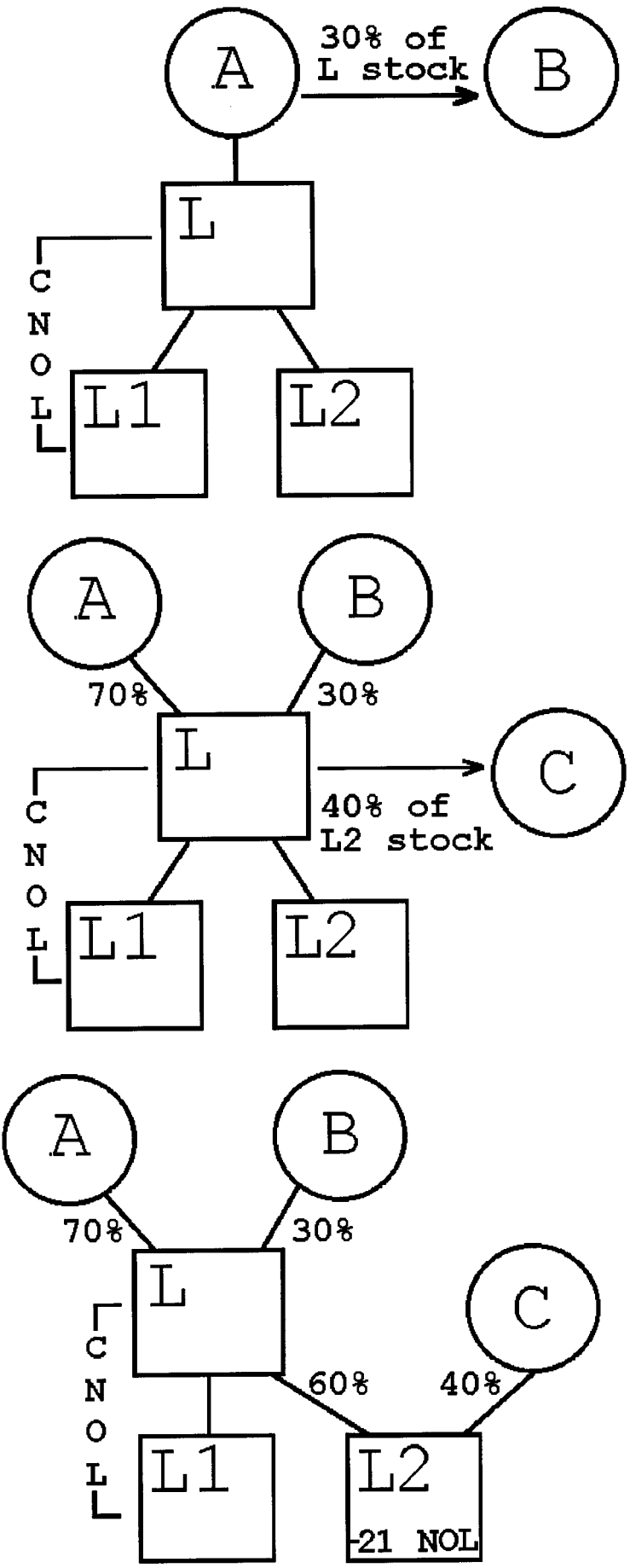
A
30% of
L stock
B
L
CNOL
L1
L2
A
B
70%
30%
L
C
40% of
L2 stock
CNOL
L1
L2
A
B
70%
30%
L
C
CNOL
60%
40%
L1
L2
-21 NOL