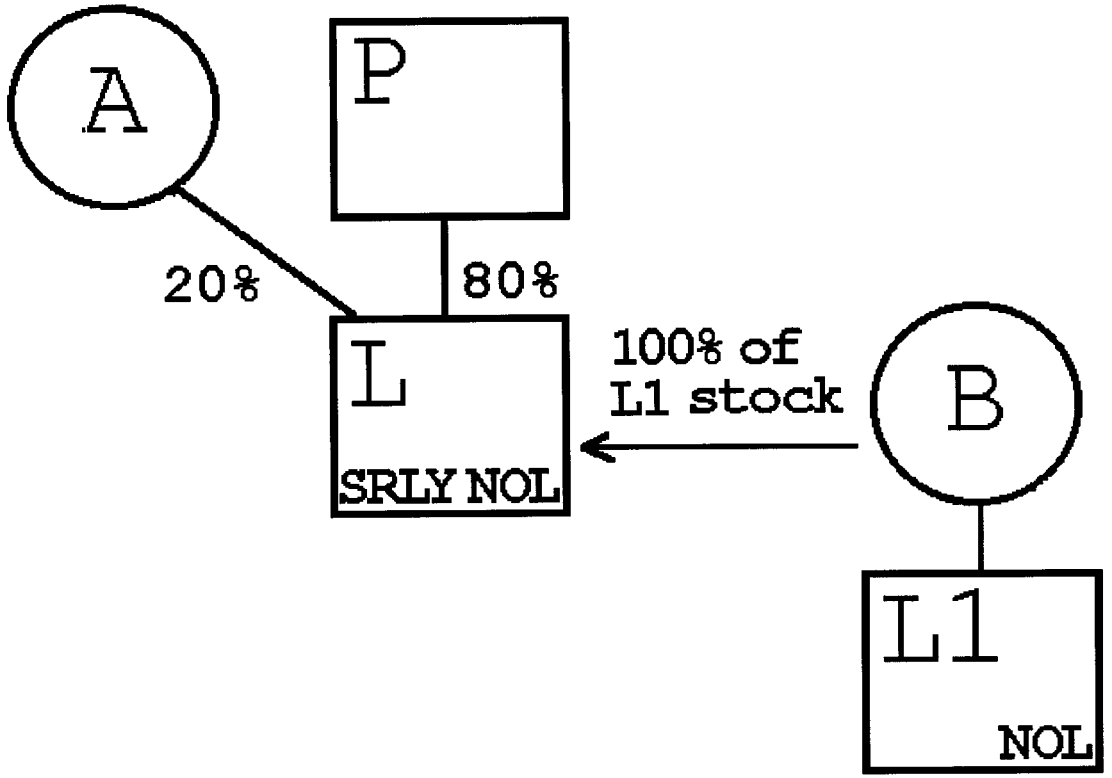
A
P
20%
80%
L
SRLY NOL
100% of
L1 stock
B
L1
NOL

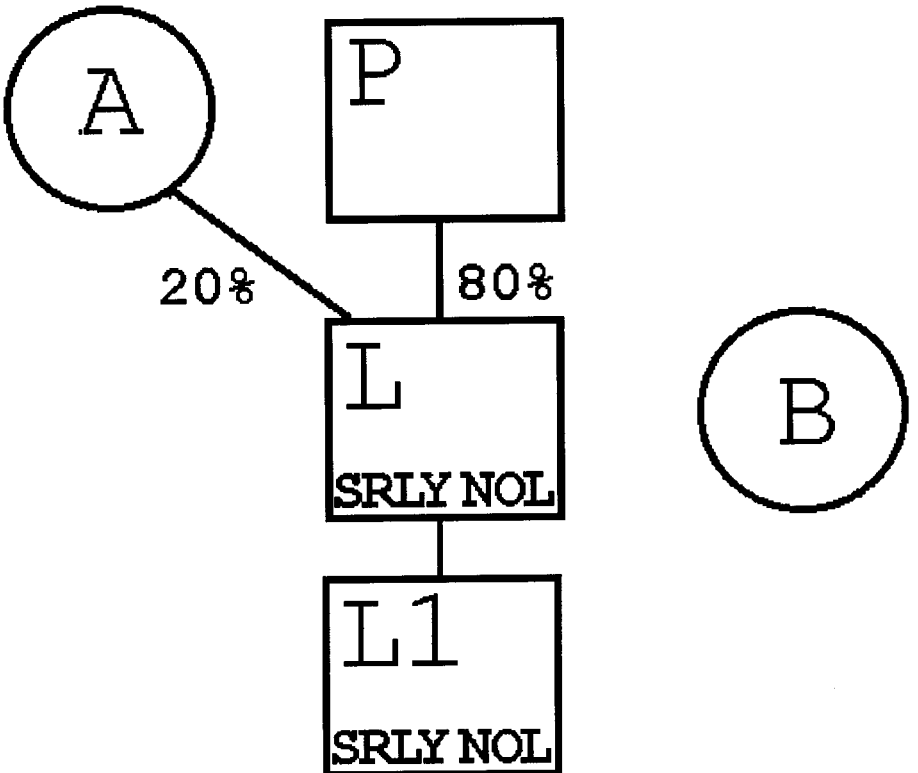
A
P
20%
80%
L
SRLY NOL
B
L1
SRLY NOL