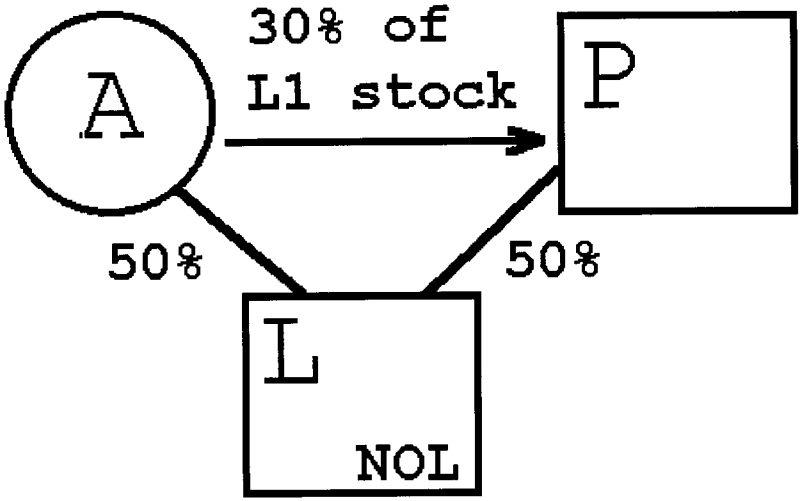
30% of
L1 stock
A
P
50%
50%
L
NOL

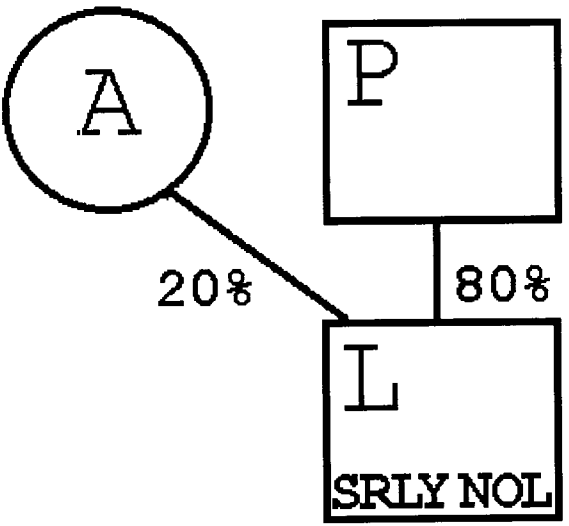
A
P
20%
80%
L
SRLY NOL