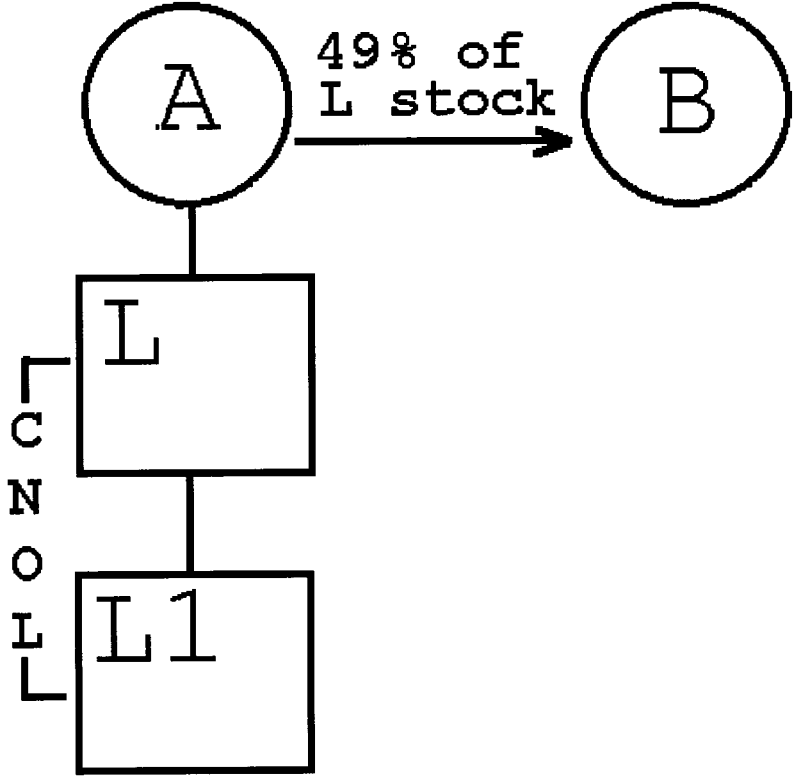
A
49% of
L stock
B
L
CONOL
L1

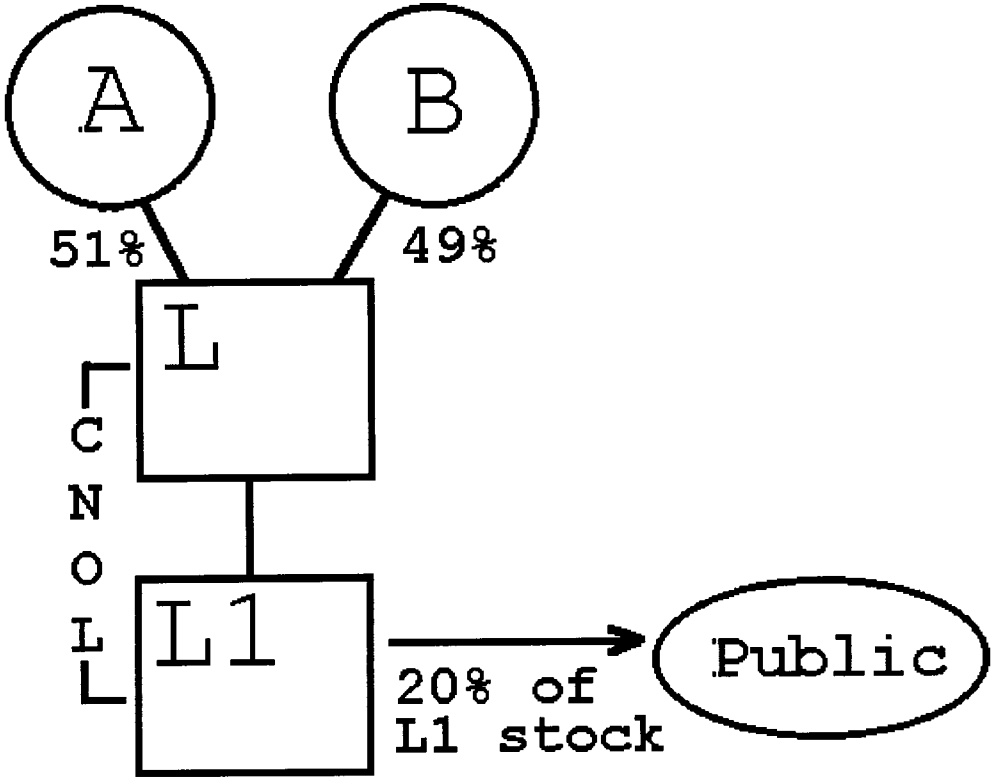
A
B
51%
49%
L
CONOL
L1
20% of
L1 stock
Public