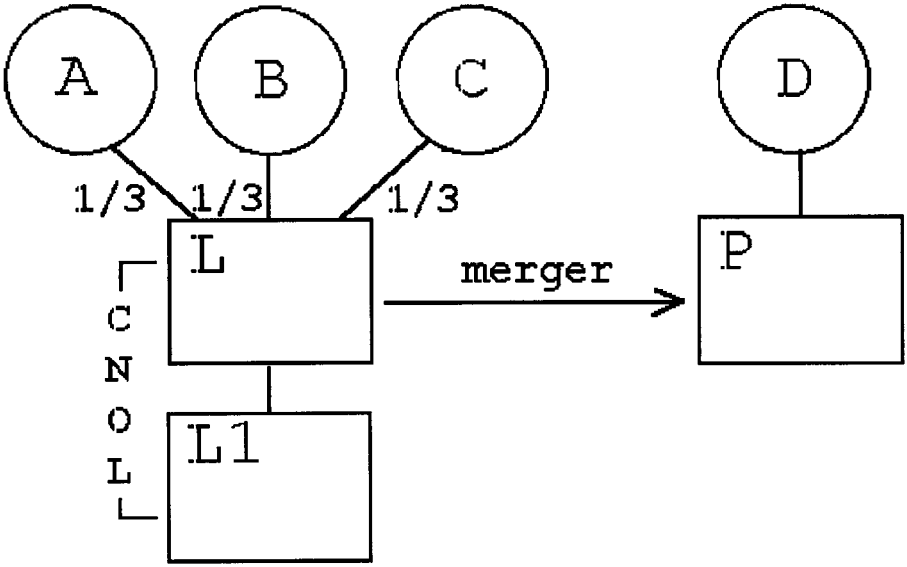
A
B
C
D
1/3
1/3
1/3
L
merger
P
CNOL
L1

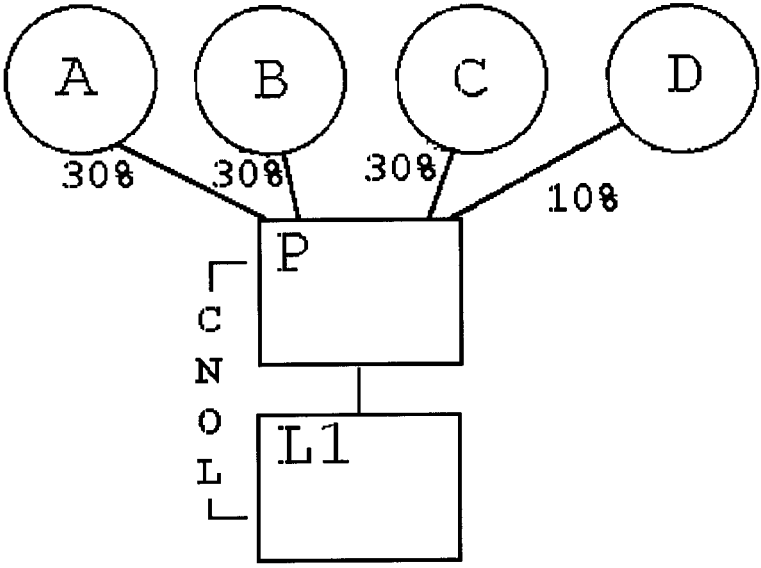
A
B
C
D
30%
30%
30%
10%
P
CNOL
L1