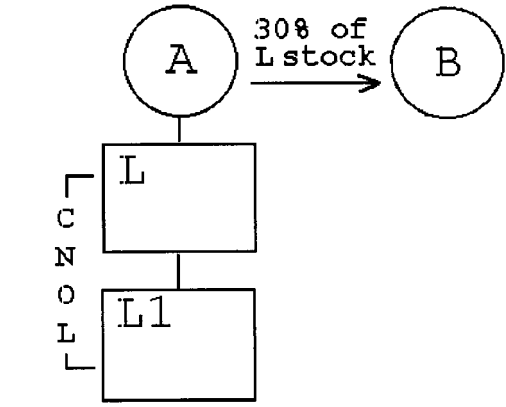
A
30% of
L stock
B
L
CNOL
L1

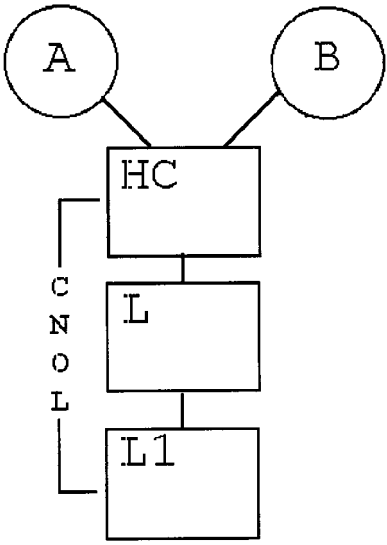
A
B
HC
CNOL
L
L1

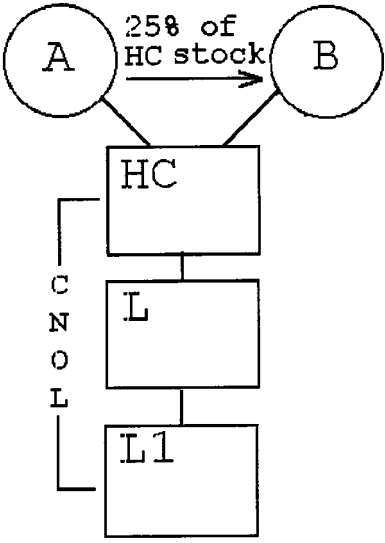
A
25% of
HC stock
B
HC
CNOL
L
L1