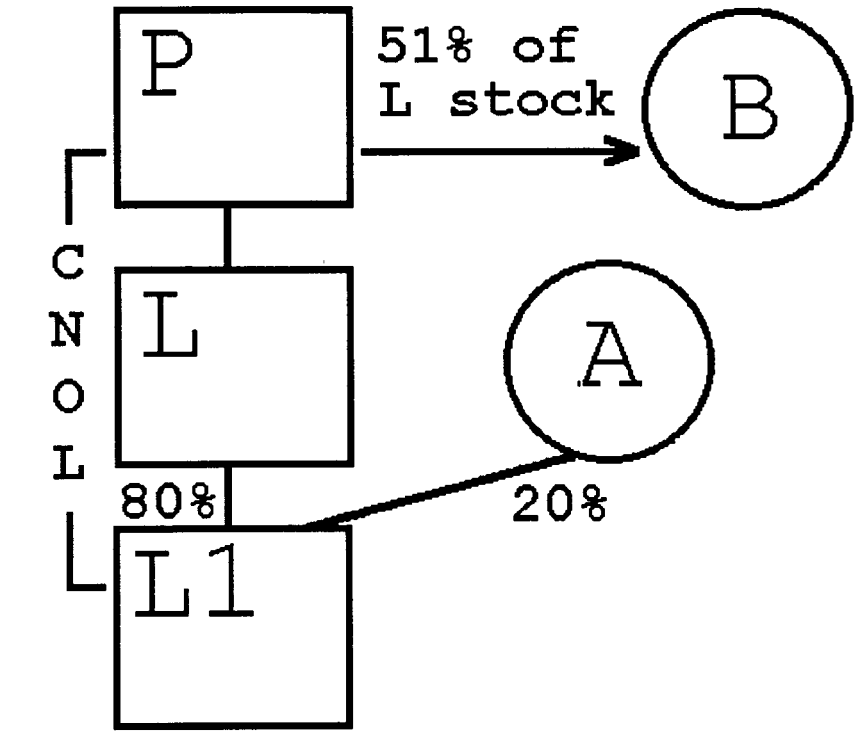
P
51% of
L stock
B
CNOL
L
A
80%
20%
L1

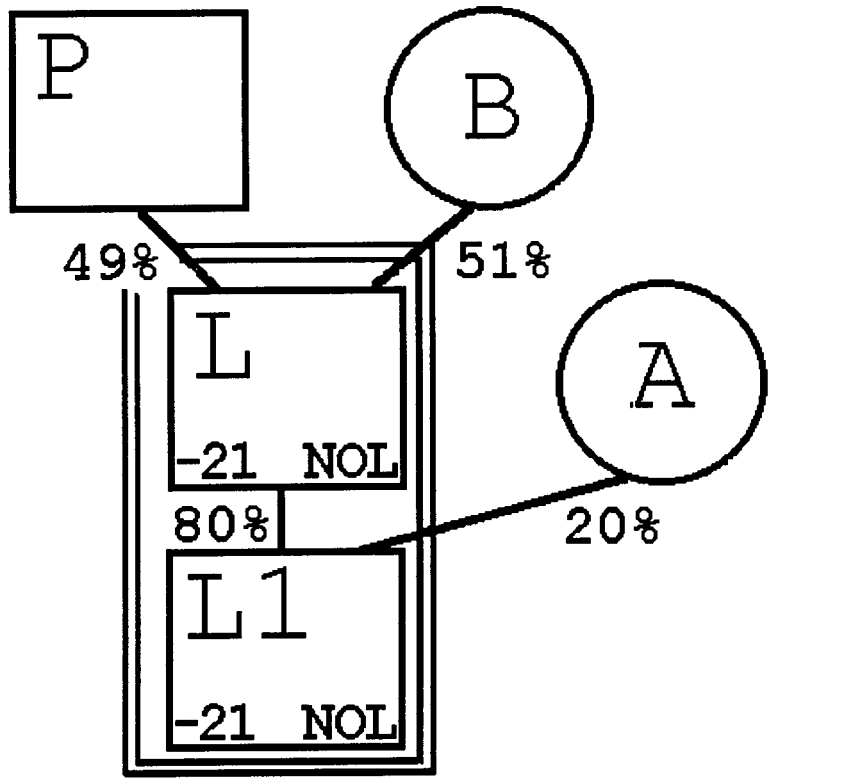
P
B
49%
51%
L
-21 NOL
A
80%
20%
L1
-21 NOL