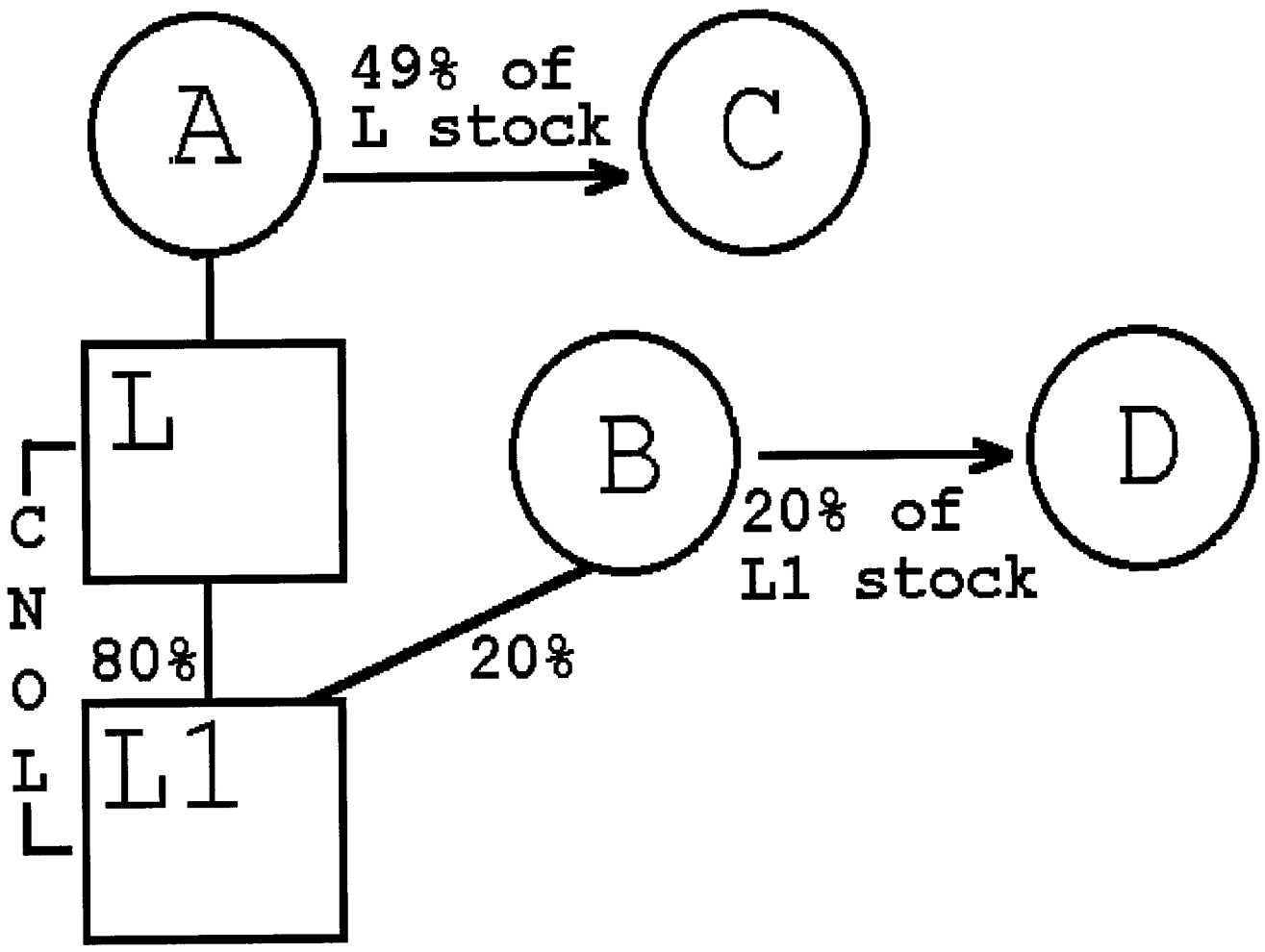
A
49% of
L stock
C
L
B
D
20% of
L1 stock
CONOL
80%
20%
L1