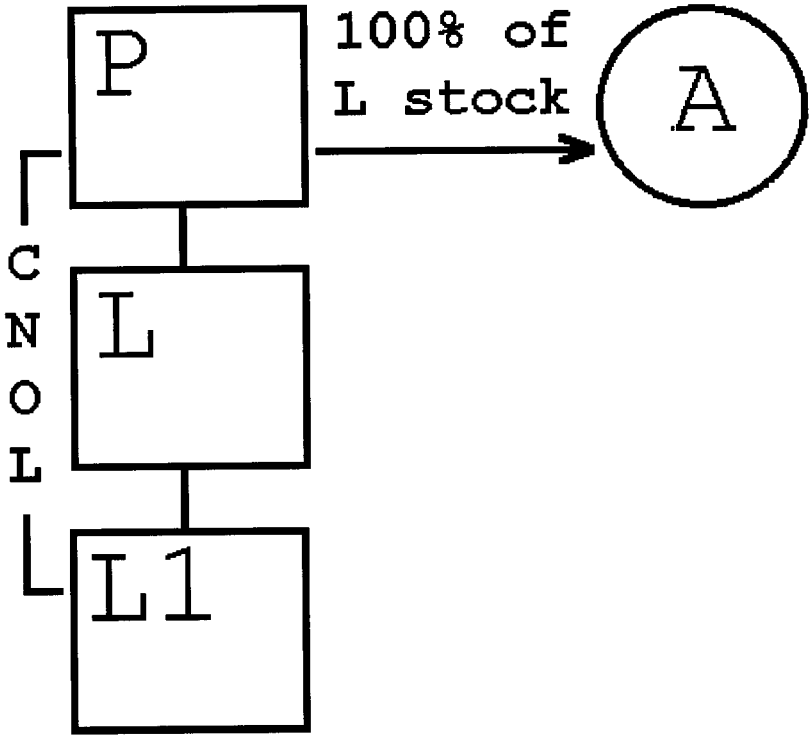
P
100% of
L stock
A
CNOL
L
L1

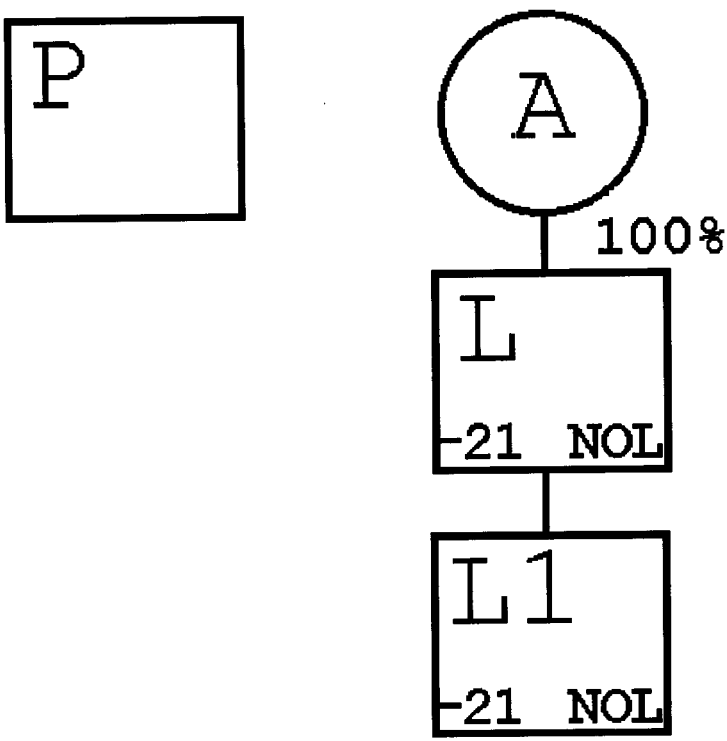
P
A
100%
L
21 NOL
L1
21 NOL